Series 3730
Type 3730-1 Electropneumatic Positioner

Fig. 1 · Type 3730-1

Mounting and Operating Instructions

EB 8384-1 EN (1300-1610)

Firmware version 2.1x

Edition December 2014

CE Ex certified

Contents Page

Revision in positioner firmware compared to the previous version	
Previous version	New
2.02	**2.10**
	New reset function in Code ***P0***, refer to section 7.8
	New manual adjustment function in Code ***P14***, refer to section 7.9
2.10	**2.11**
	Internal modifications
2.11	**2.12**
	Internal modifications

1 Important safety instructions

For your own safety, follow these instructions concerning the mounting, start-up and operation of the positioner:

- The positioner is to be mounted, started up or operated only by trained and experienced personnel familiar with the product.
  According to these Mounting and Operating Instructions, trained personnel refers to individuals who are able to judge the work they are assigned to and recognize possible dangers due to their specialized training, their knowledge and experience as well as their knowledge of the applicable standards.
- Explosion-protected versions of this positioner may only be operated by personnel who have undergone special training or instructions or who are authorized to work on explosion-protected devices in hazardous areas. Refer to section 10.
- Any hazards that could be caused by the process medium, the operating pressure, the signal pressure or by moving parts of the control valve are to be prevented by means of the appropriate measures.
- If inadmissible motions or forces are produced in the actuator as a result of the supply pressure, the supply pressure must be restricted by means of a suitable supply pressure reducing station.

To avoid damage to any equipment, the following also applies:

- Do not operate the positioner with the back of the positioner/vent opening facing upwards. The vent opening must not be sealed when the positioner is installed on site.

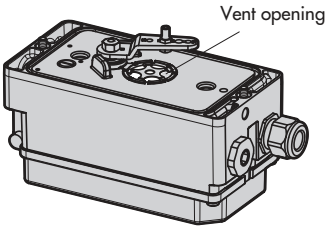

- Proper shipping and appropriate storage are assumed.
- Do not ground electric welding equipment near to the positioner.

Note: *The device with a CE marking fulfils the requirements of the Directives 94/9/EC and 2004/108/EC. The declaration of conformity is available on request.*

---

2 Article code

Article code	Type 3730-1	x	x	0	0	0	0	0	0	0	x	0	0	x	0	0	0
With LCD, autotune 4 to 20 mA reference variable, two software limit switches																	
Explosion protection																	
Without	0																
ATEX: II 2G Ex ia IIC T6 Gb,II 2D Ex tb IIIC T80°C Db IP66	1																
FM/CSA: Class I, Zone 0 AEx ia IIC; Class I, II, III; Div.1, Groups A–G; Class I, Div. 2, Groups A–D; Class II, Div. 2, Groups F, G/ Ex ia IIC T6; Class I, Zone 0; Class II, Groups E–G; Ex nA II T6; Class I, Zone 2; Class I, Div. 2, Groups A–D; Class II, Div. 2, Groups E–G	3																
ATEX: 2 Ex nA IIC T6/T5/T4 Gc X, 2 Ex ic IIC T6/T5/T4 Gc X, Ex tc IIIC T80°C Dc X6	8																
Option: Inductive limit switch																	
Without		0															
With SJ2-SN proximity switch (NC contact)		1															
With SJ2-S1N proximity switch (NO contact)		2															
Housing material																	
Standard aluminum											0						
Stainless steel 1.4581											1						
Special applications																	
Without														0			
Compatible with paint														1			
Exhaust air with ¼ NPT connection, back of positioner housing sealed														2			
Special version																	
Without															0	0	0

3 Design and principle of operation

The electropneumatic positioner is mounted to pneumatic control valves and is used to assign the valve position (controlled variable x) to the control signal (reference variable w). The DC control signal received from a control unit is compared to the travel or rotational angle of the control valve and issues a signal pressure (output variable y).

The positioner is designed depending on the corresponding accessories for direct attachment to Type 3277 Actuators or for attachment to actuators according to IEC 60534-6 (NAMUR).

Additionally, a coupling wheel included in the accessories is required to transfer the rotary motion for rotary actuators according to VDI/VDE 3845.

Springless rotary actuators require an accessory reversing amplifier to permit the powered operation in either direction.

The positioner basically consists of a travel sensor system that functions proportional to resistance, an analog i/p module with downstream booster as well as the electronic unit with a microcontroller. The positioner is fitted with two adjustable software limit switches as standard to indicate the valve's end positions.

The position of the valve is transmitted as linear travel motion or angle of rotation via pick-up lever and travel sensor (2) to an analog PD controller (3). Simultaneously, an A/D converter (4) transmits the position of the valve to the microcontroller (5). The PD controller compares this actual position to the 4 to 20 mA DC control signal (reference variable) after it has been converted by the A/D converter (4).
In case of a system deviation, the operation of the i/p converter (6) is changed so that the actuator (1) is filled or vented via the downstream air capacity booster (7). This causes the closure member of the control valve to move to the position determined by the reference variable.
The pneumatic air capacity booster (7) and the pressure regulator (8) are provided with supply air. An intermediate flow regulator (9) with fixed settings is used to purge the positioner and also guarantees trouble-free operation of the pneumatic booster.
The output signal pressure supplied by the booster can be limited to 2.4 bar by activating the parameter P9.
The volume restriction Q (10) is used to optimize the positioner by adapting it to the actuator size.

Tight-closing function:
The pneumatic actuator is completely filled with air or vented as soon as the reference variable falls below 1 % or exceeds 99 % (see end positions set over parameters P10 and P11).

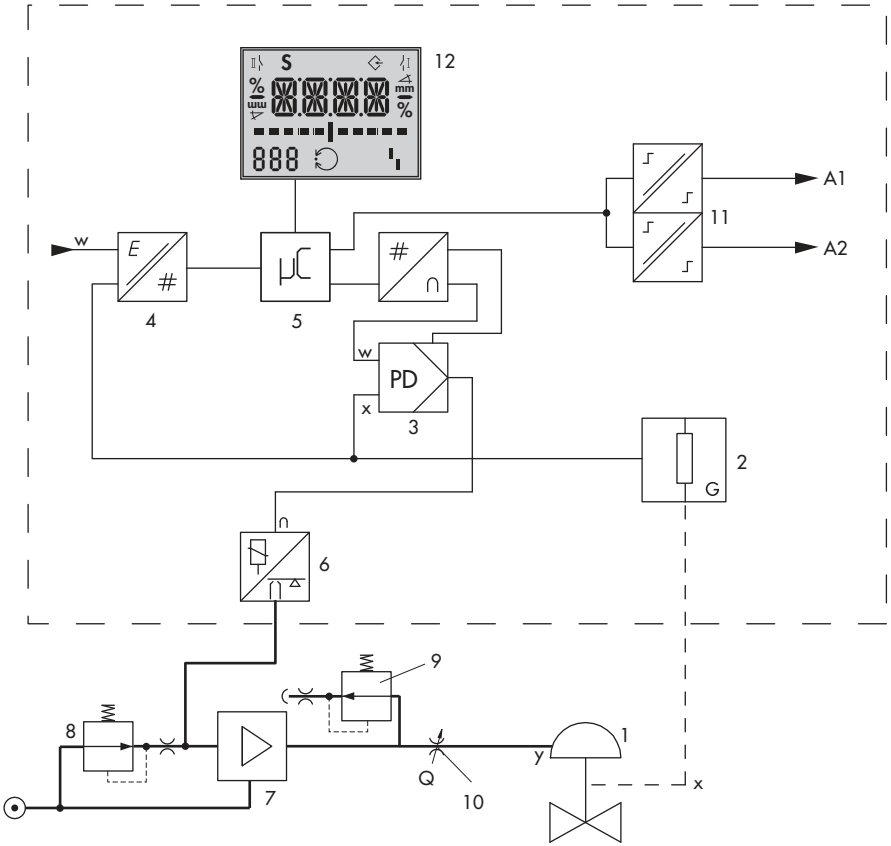

1	Control valve	7	Air capacity booster
2	Travel sensor	8	Pressure regulator
3	PD controller	9	Flow regulator
4	A/D converter	10	Volume restriction
5	Microcontroller	11	Limit switches
6	i/p converter	12	Display

Fig. 2 · Functional diagram

3.1 Technical data

Type 3730-1 Positioner **(the listed technical data of explosion-protected devices may be restricted by the limits specified in the test certificate)**	
Travel, adjustable	Direct attachment to Type 3277: 3.6 to 30 mm Attachment acc. to IEC 60534-6: 3.6 to 200 mm or 24° to 100° with rotary actuators
Travel range	Adjustable within the initialized travel/angle of rotation; travel can be restricted to ⅕ at the maximum
Reference variable w	Signal range 4 to 20 mA · Two-wire device, reverse polarity protection, split-range 4 to 11.9 mA and 12.1 to 20 mA, static destruction limit 100 mA.
Minimum current	3.7 mA
Load impedance	≤ 6 V (corresponding to 300 Ω at 20 mA)
Supply air Air quality acc. to ISO 8573-1	Supply pressure from 1.4 to 7 bar (20 to 105 psi), Max. particle size and density: Class 4 · Oil content: Class 3, pressure dew point: Class 3 or at least 10 K beneath the lowest ambient temperature to be expected
Signal pressure (output)	0 bar up to supply pressure, limitable to approx. 2.4 bar via software
Characteristic	Optionally 1 characteristic for globe valves, 8 characteristics for opening angle
Hysteresis	≤ 1 %
Sensitivity	≤ 0.1 %
Transit time	< 0.5 s for initialization not permissible, adaptation over volume restriction Q
Direction of action	w/x reversible
Air consumption, steady state	Independent from supply pressure approx. 110 l_n/h
Air output capacity Actuator filled with air Actuator vented	 At Δp = 6 bar: 8.5 m_n^3/h, at Δp = 1.4 bar: 3.0 m_n^3/h · $K_{Vmax(20\ °C)}$ = 0.09 at Δp = 6 bar: 14.0 m_n^3/h, at Δp = 1.4 bar: 4.5 m_n^3/h · $K_{Vmax(20\ °C)}$ = 0.15
Permissible ambient temperature	–20 to +80 °C in all versions –45 to +80 °C with metal cable gland –25 to +80 °C with inductive limit switches (SJ2-S1N) and metal cable gland **The listed technical data of explosion-protected devices may be restricted by the limits specified in the test certificate.**
Influences	Temperature: ≤ 0.15 %/10 K Supply air: None Vibration: ≤ 0.25 % up to 2000 Hz and 4 g acc. to IEC 770
Electromagnetic compatibility	Complying with requirements specified in EN 61000-6-2, EN 61000-6-3, EN 61326-1 and NAMUR Recommendation NE 21
Electrical connections	One M20 x 1.5 cable gland for 6 to 12 mm clamping range · Additional second M20 x 1.5 threaded hole · Screw terminals for 0.2 to 2.5 mm² wire cross-section
Degree of protection	IP 66/NEMA 4X

Type 3730-1 Positioner **(the listed technical data of explosion-protected devices may be restricted by the limits specified in the test certificate)**		
Use in safety-instrumented systems in compliance with IEC 61508	Suitable for use in safety-relevant applications up to SIL 2 (single device) and SIL 3 (with redundant configuration), safety shutdown at a reference variable of 0 mA.	
Explosion protection	See table on summary of explosion protection certificates for Type 3730-1	
Weight	Approx. 1 kg	
Compliance	CE · EAC	
Materials		
Housing	Die-cast aluminum EN AC-Al Si12(Fe) (EN AC-44300) acc. to DIN EN 1706, chromated and plastic coated · Special version: Stainless steel 1.4581	
External parts	Stainless steel 1.4571 and 1.4301	
Cable gland	M20x1.5, black polyamide	
Binary contacts	Two software limit switches with configurable limits (0.5 % steps), reverse polarity protection, floating	
Signal status No response: Response:	**Without explosion protection** Conductive (R = 348 Ω) Non-conducting	**Explosion-protected version** ≥ 2.2 mA ≤ 1.0 mA
Operating voltage	- Binary input of the PLC acc. to IEC 61131-2, P_{max} = 400 mW - NAMUR switching amplifier acc. to EN 60947-5-6	Only for connection to NAMUR signal converter acc. to EN 60947-5-6
Option: **Inductive limit switch**	For connection to switching amplifier acc. to EN 60947-5-6. Can be used in combination with a software limit switch.	
SJ2-SN proximity switch	NAMUR NC contact	
SJ2-S1N proximity switch	NAMUR NO contact	

Summary of explosion protection certificates for Type 3730-1

Type 3730	Certification			Type of protection/comments
-1	**STCC**	Number Valid until	972 2017-10-01	0Ex ia IIC T6X; 2Ex s II T6 X
-11		Number Valid until	PTB 04 ATEX 2033 2013-11-27	II 2G Ex ia IIC T6 Gb, II 2D Ex tb IIIC T80°C Db IP66
-11	**CCoE**	Number Date Valid until	A/P/HQ/MH/144/1164 2014-10-27 2019-10-26	Ex ia IIC T6
-11		Number Date Valid until	RU C DE.08.B.00113 2013-11-15 2018-11-14	1 Ex ia IIC T6/T5/T4 Gb X Ex tb IIIC T80°C Db X
-11		Number Date	IECEx PTB 06.0055 2006-11-02	Ex ia IIC T6
-11	**INMETRO**	On request		
11		Number Date Valid until	GYJ14.1109 2014-05-08 2019-05-07	Ex ia IIC T4~T6 Gb
-13		Number Date	1675820 2010-07-19	Ex ia IIC T6; Class I, Zone 0; Class II, Groups E,F,G; Ex nA II T6; Class I, Zone 2 Class I, Div.2, Groups A,B,C,D Class II, Div.2, Groups E,F,G
-13		Number Date	3023478 2008-11-03	Class I,Zone 0 AEx ia IIC Class I,II,III;Div.1, Groups A,B,C,D,E,F,G Class I,Div.2, Groups A,B,C,D; Class II, Div,2 Groups F,G
-18		Number Valid until	PTB 04 ATEX 2114 X 2013-11-27	II 3G Ex nA II T6 Gc, II 3G Ex ic IIC T6 Gc, II 3D Ex tc IIIC IP66 Dc T80°C
-18		Number Date Valid until	RU-C-DE.08.B.00113 2013-11-15 2018-11-14	2 Ex nA IIC T6/T5/T4 Gc X 2 Ex ic IIC T6/T5/T4 Gc X Ex tc IIIC T80°C Dc X
-18		Number Date Valid until	GYJ14.1110X 2014-05-08 2019-05-07	Ex ic IIC T4~T6 Gc, Ex nA IIC T4~T6 Gc

4 Attachment to the control valve – mounting parts and accessories

The positioner can be attached either directly to a SAMSON Type 3277 Actuator or according to IEC 60534-6 (NAMUR) to control valves with cast yokes or rod-type yokes as well as to rotary actuators according to VDI/VDE 3845.

For attachment to the various actuators, corresponding mounting parts and accessories are required. These are listed with their order numbers in Tables 1 to 6.

On attaching the positioner, it is important to observe the assignment between lever and pin position according to the travels listed in the travel tables.

The actual valve travel that can be achieved is restricted by the pin position used and additionally by the actuator spring compression required.

The travel range listed in the **travel tables opposite** can only achieved if the nominal range is set to MAX.

The positioner is standard equipped with the lever **M** (pin position **35**).

Note: *If the standard mounted lever M (pin position 35) is replaced, the newly mounted lever must be moved once all the way as far as it will go in both directions to adapt it to the internal measuring lever.*

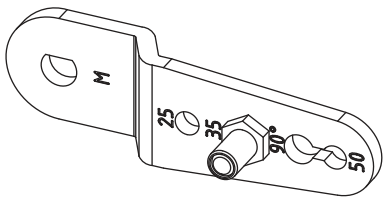

Fig. 3 · Lever M (set pin position 35)

Travel tables

Note: *The lever **M** is included in the scope of delivery.*
*Levers **S**, **L**, **XL** for attachment according to IEC 60534-6 (NAMUR) are available as accessories (Table 3 on page 39).*

Direct attachment to Type 3277-5 and Type 3277 Actuators

Actuator size [cm²]	Rated travel [mm]	Adjustment range at positioner Min.	Travel	Max.	Required lever	Assigned pin position
120	7.5	5.0	to	25.0	M	25
120/175/240/350	15	7.0	to	22.0	M	35
355/700/750	30	10.0	to	50.0	M	50

Attachment according to IEC 60534-6 (NAMUR attachment)

SAMSON valves/Type 3271 Actuator Actuator size [cm²]	Rated travel [mm]	Other valves/actuators Min.	Travel	Max.	Required lever	Assigned pin position
60 and 120 with Type 3510	7.5	3.6	to	18.0	S	17
120	7.5	5.0	to	25.0	M	25
120/175/240/350	15	7.0	to	22.0	M	35
700/750	7.5					
355/700/750	15 and 30	10.0	to	50.0	M	50
1000/1400/2800	30	14.0	to	70.0	L	70
1000/1400/2800	60	20.0	to	100.0	L	100
1400/2800	120	40.0	to	200.0	XL	200

Attachment to rotary actuators according to VDI/VDE 3845

Rotary actuators Min.	Opening angle	Max.	Required lever	Assigned pin position
24	to	100°	M	90°

4.1 Direct attachment

4.1.1 Type 3277-5 Actuator

Refer to Table 1 on page 37 for the required mounting parts as well as the accessories. Note the travel table on page 15.

Actuator with 120 cm²

Depending on the type of positioner attachment, the signal pressure is routed either left or right of the yoke through a bore to the actuator diaphragm. Depending on the fail-safe action of the actuator "Actuator stem extends" or "Actuator stem retracts" (valve closes or opens if the supply air fails), the switchover plate (9) must first be attached to the actuator yoke. Align the switchover plate with the corresponding symbol for left or right attachment according to the marking (view looking onto the switchover plate).

1. Mount connecting plate (6) or pressure gauge bracket (7) with pressure gauges onto the positioner, making sure both seal rings (6.1) are seated properly.
2. Remove screw plug (4) on the back of the positioner and close the signal pressure output (38) on the connecting plate (6) or on the pressure gauge bracket (7) with the stopper (5) included in the accessories.
3. Place follower clamp (3) on the actuator stem, align and screw tight so that the mounting screw is located in the groove of the actuator stem.
4. Mount cover plate (10) with narrow side of the cut-out opening (Fig. 4, on the left) pointing towards the signal pressure connection. Make sure that the bonded gasket (14) points towards the actuator yoke.
5. **15 mm travel:** Keep the follower pin (2) at lever **M** (1) on the back of the positioner in the pin position **35** (delivered state).
   7.5 mm travel: Remove the follower pin (2) from the pin position **35**, reposition it in the bore for pin position **25** and screw tight.
6. Insert formed seal (15) into the groove of the positioner housing and the seal ring (10.1) on the back of the housing.
7. Place positioner on the cover plate (10) in such a manner that the follower pin (2) rests on the top of the follower clamp (3). Adjust the lever (1) correspondingly and open the positioner cover to hold the positioner shaft in position at the cap or the switch (Fig. 17).
   The lever (1) must rest on the follower clamp with spring force. Mount the positioner on the cover plate (10) using the two fixing screws.

Note for all types of attachment except for direct attachment to Type 3277-5: *The signal pressure output at the back must be sealed using the screw plug (4, order no. 0180-1254) and the associated O-ring (order no. 0520-0412).*

---

8. Mount cover (11) on the other side. Make sure that the vent plug points downwards when the control valve is installed to allow any condensed water that collects to drain off.

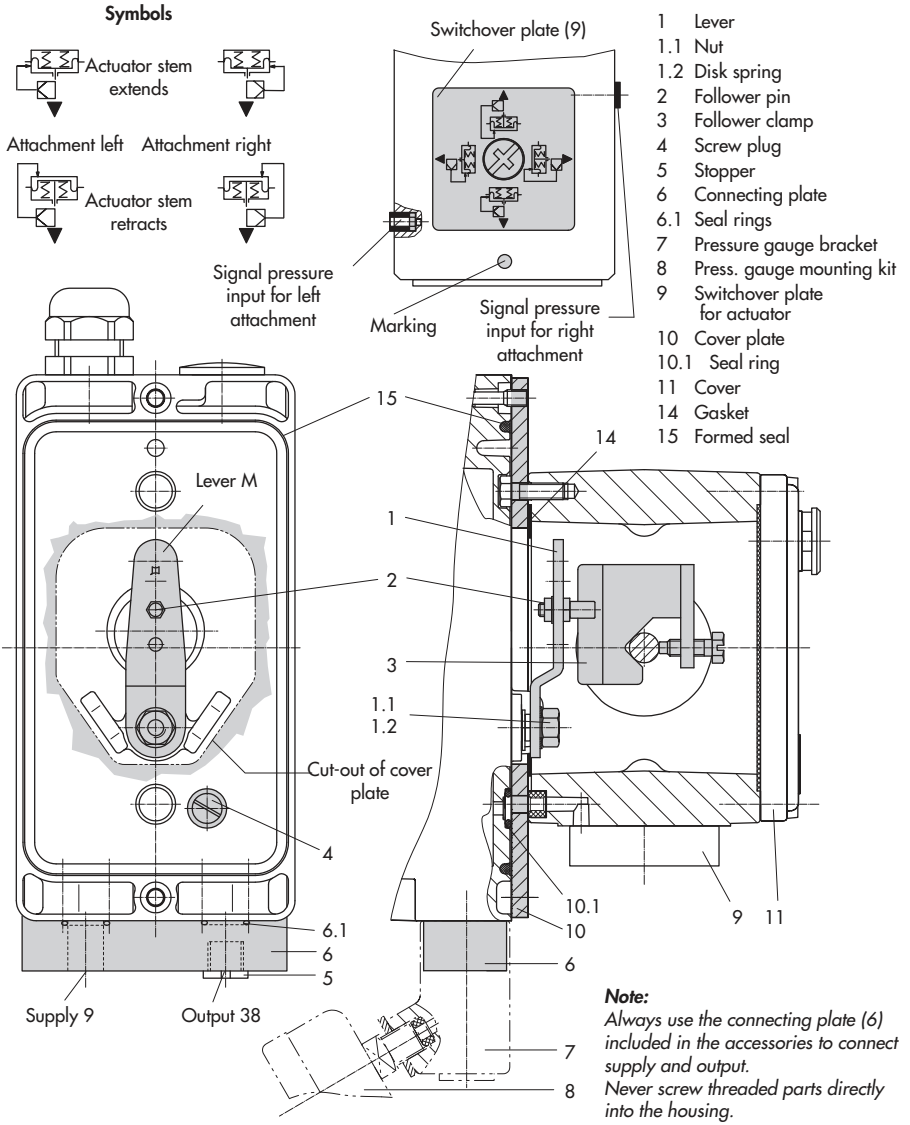

Fig. 4 · Direct attachment – Signal pressure connection for Type 3277-5 Actuator with 120 cm²

4.1.2 Type 3277 Actuator

Refer to Table 2 on page 38 for the required mounting parts as well as the accessories with their order numbers.
Note the travel table on page 15.

Actuators with 175 to 750 cm²

Mount the positioner on the yoke as shown in Fig. 5. The signal pressure is routed to the actuator over the connection block (12), for actuators with fail-safe action "Actuator stem extends" internally through a bore in the valve yoke and for "Actuator stem retracts" through external piping.

1. Place follower clamp (3) on the actuator stem, align and screw tight so that the mounting screw is located in the groove of the actuator stem.
2. Mount cover plate (10) with narrow side of the cut-out opening (Fig. 5, on the left) pointing towards the signal pressure connection. Make sure that the bonded gasket (14) points towards the actuator yoke.
3. For actuators with 355, 700 and 750 cm², remove the follower pin (2) at lever **M** (1) on the back of the positioner from pin position **35**, reposition it in the bore for pin position **50** and screw tight. For actuators 175, 240 and 350 cm² with 15 mm travel, the follower pin (2) remains in pin position **35**.
4. Insert formed seal (15) in the groove of the positioner casing.
5. Place positioner on the cover plate in such a manner that the follower pin (2) rests on the top of the follower clamp (3). Adjust the lever (1) correspondingly and open the positioner cover to hold the positioner shaft in position at the cap or the switch (Fig. 17). The lever (1) must rest on the follower clamp with spring force. Mount the positioner on the cover plate (10) using the two fixing screws.
6. Make sure that the tip of the gasket (16) projecting from the side of the connection block (12) is positioned above the actuator symbol that corresponds with the actuator with fail-safe action "Actuator stem extends" or "Actuator stem retracts." If necessary, remove the three fixing screws and the cover. Then reposition the gasket (16) turned by 180°. The previous version of the connection block (Fig. 5, bottom) requires the switch plate (13) to be turned such that the corresponding actuator symbol points to the marking.
7. Place the connection block (12) with the associated seal rings against the positioner and the actuator yoke. Screw it tight using the fixing screw (12.1). For actuators with fail-safe action "Actuator stem retracts", additionally remove the stopper (12.2) and fit on the external signal pressure piping.
8. Mount cover (11) on the other side. Make sure that the vent plug points downwards when the control valve is installed to allow any condensed water that collects to drain off.

1	Lever	12	Connection block
1.1	Nut	12.1	Screw
1.2	Disk spring	12.2	Stopper or connection for external piping
2	Follower pin	13	Switch plate
3	Follower clamp	14	Gasket
10	Cover plate	15	Formed seal
11	Cover	16	Gasket
11.1	Vent plug		

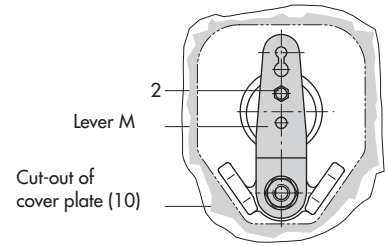

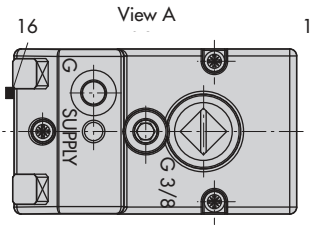

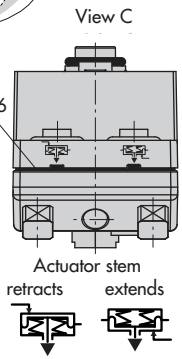

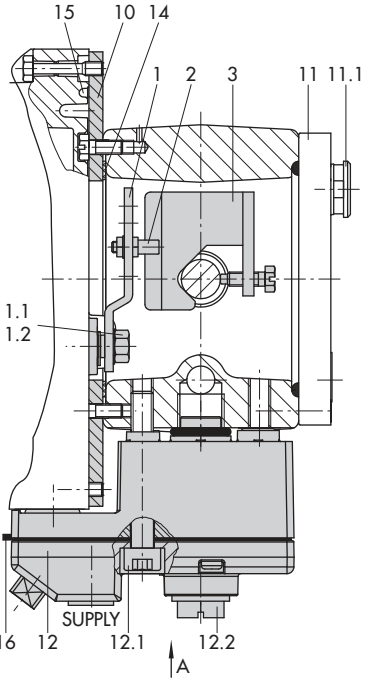

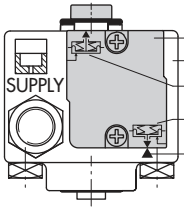

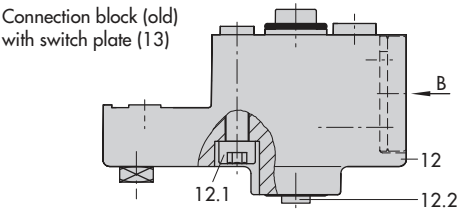

Fig. 5 · Direct attachment – Signal pressure connection for Type 3277 Actuator with 175 to 750 cm²

4.2 Attachment according to IEC 60534-6

The positioner is attached to the control valve with a NAMUR bracket (10).

Refer to Table 3 on page 39 for the required mounting parts as well as the accessories with their order numbers.
Note the travel table on page 15.

1. Screw the two bolts (14) to the bracket (9.1) of the stem connector (9), place the follower plate (3) on top and use the screws (14.1) to tighten.

Actuator size 2800 cm² and 1400 cm² with 120 mm travel:
For a travel of 60 mm or smaller, screw the longer follower plate (3.1) directly to the stem connector (9). For a travel exceeding 60 mm, mount the bracket (16) first and then the follower plate (3) to the bracket together with the bolts (14) and screws (14.1).

2. Mount NAMUR bracket (10) to the control valve as follows:
   For attachment to the NAMUR rib, use an M8 screw (11) and toothed lock washer directly in the yoke bore.
   For attachment to valves with rod-type yokes, use two U-bolts (15) around the yoke.
   Align the NAMUR bracket (10) according to the embossed scale so that the slot of the follower plate (3) is centrally aligned with the NAMUR bracket at mid valve travel.
3. Mount connecting plate (6) or pressure gauge bracket (7) with pressure gauges (8) on the positioner, making sure both seal rings (6.1) are seated properly.
4. Select required lever size (1) **M**, **L** or **XL** and pin position according to the actuator size and valve travels listed in the table below.
   Should you require a pin position other than position **35** with the standard installed lever **M**, or require a lever size **L** or **XL**, proceed as follows:
5. Screw the follower pin (2) in the assigned lever bore (pin position) as listed in the table. Only use the longer follower pin (2) included in the mounting kit.
6. Place lever (1) on the positioner shaft and screw tight using the disk spring (1.2) and nut (1.1).

Note: *If you have mounted a new lever (1), you must move it once all the way as far as it will go in both directions.*

---

7. Place positioner on the NAMUR bracket in such a manner that the follower pin (2) rests in the slot of the follower plate (3, 3.1). Adjust the lever (1) correspondingly.
   Screw the positioner to the NAMUR bracket using both its fixing screws.

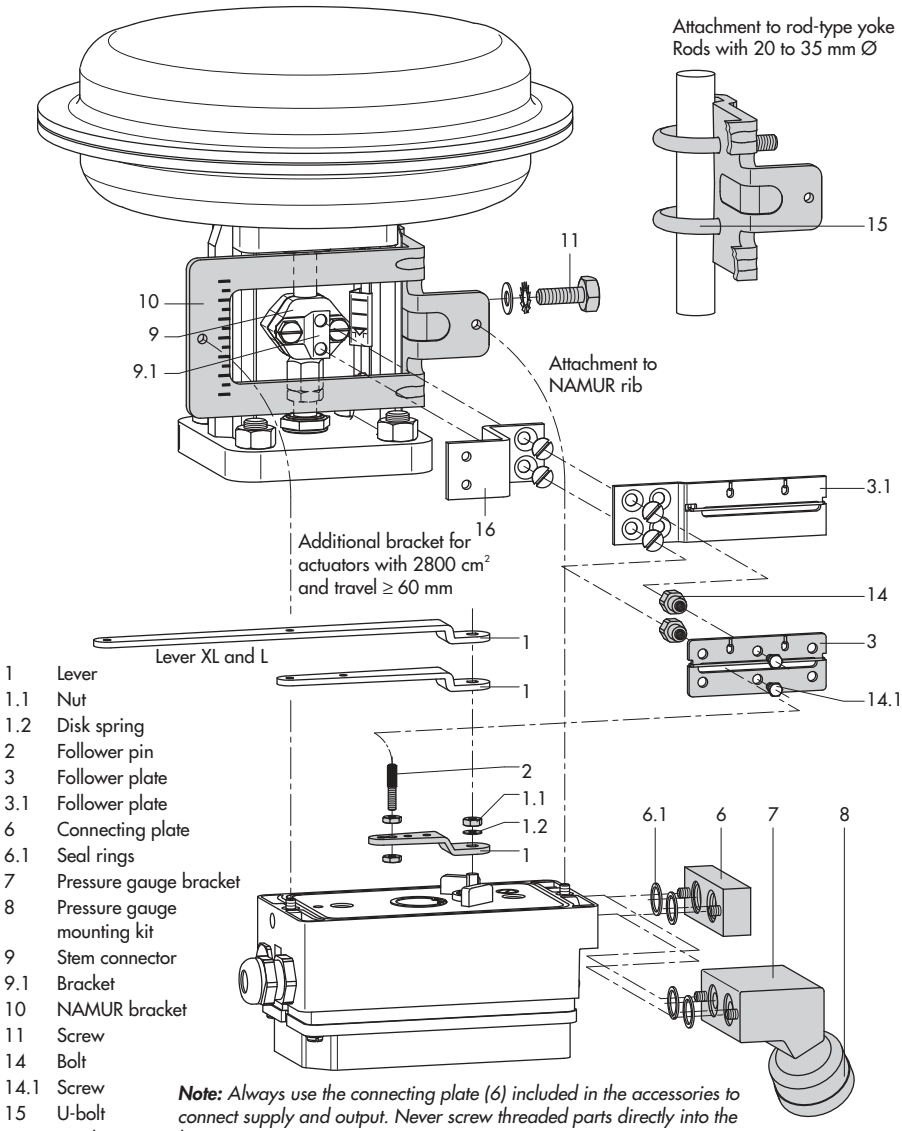

1	Lever
1.1	Nut
1.2	Disk spring
2	Follower pin
3	Follower plate
3.1	Follower plate
6	Connecting plate
6.1	Seal rings
7	Pressure gauge bracket
8	Pressure gauge mounting kit
9	Stem connector
9.1	Bracket
10	NAMUR bracket
11	Screw
14	Bolt
14.1	Screw
15	U-bolt
16	Bracket

Note: *Always use the connecting plate (6) included in the accessories to connect supply and output. Never screw threaded parts directly into the housing.*

Fig. 6 · Attachment according to IEC 60534-6 (NAMUR)

4.3 Attachment according to VDI/VDE 3847

Type 3730-1xx0000000x00**6**000 and Type 3730-1xx0000000x00**7**000 Positioners with optional air purging of the actuator's spring chamber can be attached according to VDI/VDE 3847.

Type 3730-1xx0000000x00**0**000 Positioner without optional air purging of the actuator's spring chamber can be attached according to VDI/VDE 3847.

This type of attachment allows the positioners to be replaced quickly while the process is running by blocking the air in the actuator.

The signal pressure can be blocked in the actuator by unscrewing the red retaining screw (20) and then turning the air blocker (19) on the bottom of the adapter block.

Attachment to Type 3277 Actuator (see Fig. 7)

Refer to Table 4 on page 39 for the required mounting parts as well as the accessories.

Mount the positioner on the yoke as shown in Fig. 7. The signal pressure is routed to the actuator over the connecting plate (12), for actuators with fail-safe action "actuator stem extends" internally through a bore in the valve yoke and for "actuator stem retracts" through external piping.

Only the Y1 port is required for positioner attachment. The Y2 port can be used for air purging of the spring chamber.

1. Place follower clamp (3) on the actuator stem, align and screw tight so that the mounting screw is located in the groove of the actuator stem.
2. Place the adapter bracket (6) on the positioner and mount using the screws (6.1). Make sure that the seals are correctly seated. For positioners **with air purging**, remove the stopper (5) before mounting the positioner.
   For positioners **without air purging**, replace the screw plug (4) with a vent plug.
3. For actuators with 355/700/750 cm², remove the follower pin (2) at lever **M** (1) on the back of the positioner from pin position **35**, reposition it in the bore for pin position **50** and screw tight.
   For actuators 175, 240 and 350 cm² with 15 mm travel, the follower pin (2) remains in pin position **35**.
4. Insert formed seal (6.2) in the groove of the adapter bracket.
5. Insert the formed seal (17.1) into the turnboard (17) and mount the turnboard to the adapter block (13) using the screws (17.2).
6. Mount the blank plate (18) to the turnboard (17) using the screws (18.1) Make sure that the seals are correctly seated.

Note: *A solenoid valve can also be mounted in place of the blank plate (18). The orientation of the turnboard (17) determine the mounting position of the solenoid valve. Alternatively, a restrictor plate can be mounted (see AB 11 EN).*

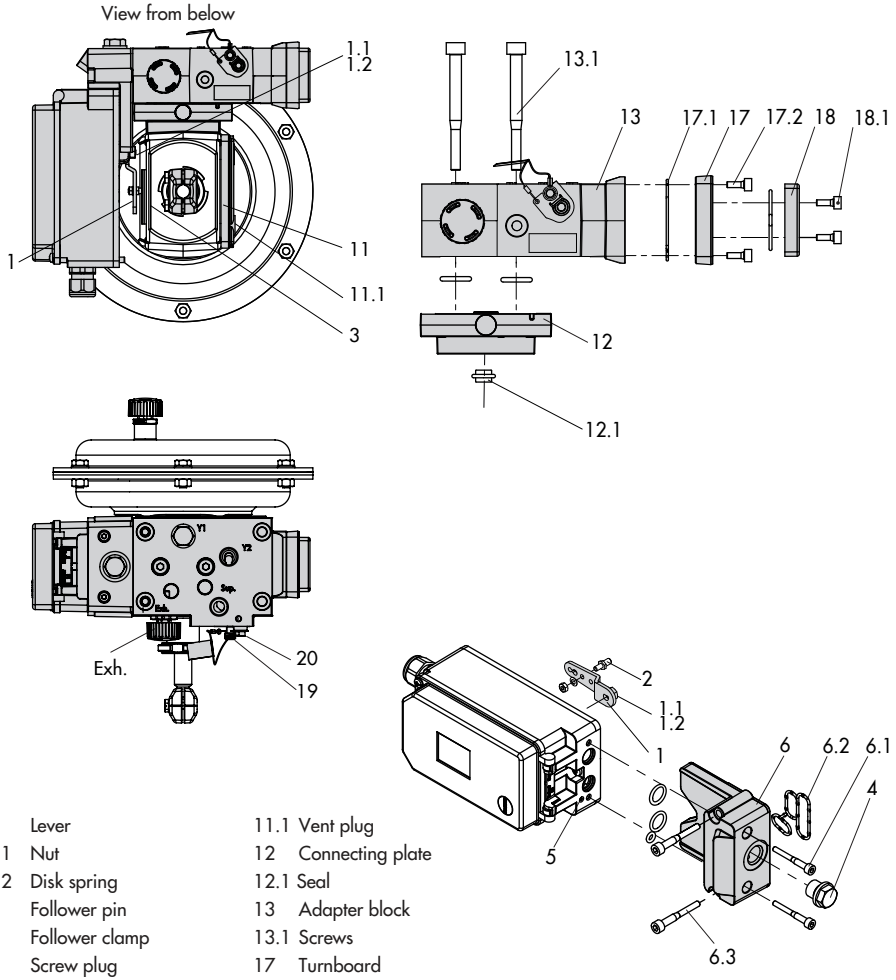

1	Lever	11.1	Vent plug
1.1	Nut	12	Connecting plate
1.2	Disk spring	12.1	Seal
2	Follower pin	13	Adapter block
3	Follower clamp	13.1	Screws
4	Screw plug	17	Turnboard
5	Stopper	17.1	Formed seal
6	Adapter bracket	17.2	Screws
6.1	Screws	18	Blank plate
6.2	Formed seal	18.1	Screws
6.3	Screws	19	Air blocker
11	Cover	20	Retaining screw

Fig. 7 · Attachment according to VDI/VDE 3847 onto Type 3277 Actuator

7. Insert screws (13.1) through the middle holes of the adapter block (13).
8. Place the connecting plate (12) together with the seal (12.1) onto the screws (13.1) corresponding to the fail-safe action "actuator stem extends" or "actuator stem retracts".
   The fail-safe action that applies is determined by aligning the groove of the adapter block (13) with the groove of the connecting plate (12) (Fig. 8).

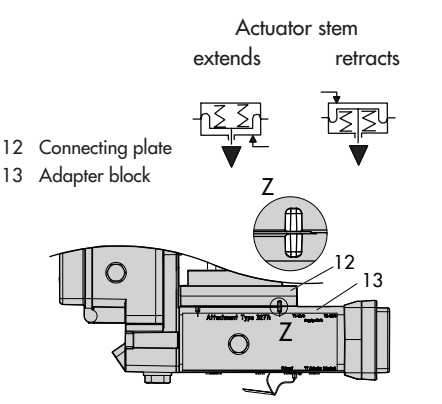

Fig. 8 · Fail-safe action

9. Mount the adapter block (13) together with the connecting plate (12) to the actuator using the screws (13.1).
10. Insert the vent plug (11.1) into the **Exh.** connection.
11. For fail-safe action "actuator stem extends", seal the Y1 port with a blanking plug.
    For fail-safe action "actuator stem retracts", connect the Y1 port to the signal pressure connection of the actuator.
12. Place the positioner on the adapter block (13) in such a manner that the follower pin (2) rests on the top of the follower clamp (3). Adjust the lever (1) correspondingly and open the positioner cover to hold the positioner shaft in position at the cap or the switch (Fig. X). The lever (1) must rest on the follower clamp with spring force.
    Fasten the positioner to the adapter block (13) using the two fixing screws (6.3). Make sure the formed seal (6.2) is properly seated.
13. Mount cover (11) on the other side. Make sure that the vent plug points downwards when the control valve is installed to allow any condensed water that collects to drain off.

Attachment to NAMUR rib (see Fig. 9)

Refer to Table 4 on page 39 for the required mounting parts as well as the accessories. Note the travel table on page 15.

1. **Series 240 Valves, actuator size up to 1400-60 cm²:** Screw the two bolts (14) to the bracket of the stem connector or directly to the stem connector (depending on the version), place the follower plate (3) on top and use the screws (14.1) to fasten it.

   Type 3251 Valve, 350 to 2800 cm²: Screw the longer follower plate (3.1) to the bracket of the stem connector or directly to the stem connector (depending on the version).

   Type 3254 Valve, 1400-120 to 2800 cm²: Screw the two bolts (14) to the bracket (16). Fasten the bracket (16) onto the stem connector, place the follower plate (3) on top and use the screws (14.1) to fasten it.

Mount the positioner on the NAMUR rib as shown in Fig. 9.

2. For **attachment to the NAMUR rib**, fasten the NAMUR connection block (10) directly into the existing yoke bore using the screw and toothed lock washer (11). Align the marking on the NAMUR valve connection (on the side marked '1') to 50 % travel.
   For **attachment to valves with rod-type yokes**, use two U-bolts (15) around the stem.
   Fasten the NAMUR connection block (10) directly into the existing yoke bore using the screw and toothed lock washer (11). Align the marking on the NAMUR connection block (on the side marked '1') to 50 % travel.
3. Place the adapter bracket (6) on the positioner and mount using the screws (6.1). Make sure that the seals are correctly seated. For positioners **with air purging**, remove the stopper (5) before mounting the positioner.
   For positioners **without air purging**, replace the screw plug (4) with a vent plug.
4. Select required lever size (1) **M**, **L** or **XL** and pin position according to the actuator size and valve travels listed in the table on page .

Should you require a pin position other than position **35** with the standard installed lever **M**, or require a lever size **L** or **XL**, proceed as follows:

– Screw the follower pin (2) in the assigned lever bore (pin position) as listed in the table. Only use the longer follower pin (2) included in the mounting kit.
– Place lever (1) on the positioner shaft and screw tight using the disk spring (1.2) and nut (1.1).
– Move the lever once all the way as far as it will go in both directions.

5. Insert formed seal (6.2) in the groove of the adapter bracket.
6. Insert the formed seal (17.1) into the turnboard (17) and mount the turnboard to the adapter block (13) using the screws (17.2).

7. Mount the blank plate (18) to the turnboard (17) using the screws (18.1) Make sure that the seals are correctly seated.

Note: *A solenoid valve can also be mounted in place of the blank plate (18). The orientation of the turnboard (17) determine the mounting position of the solenoid valve. Alternatively, a restrictor plate can be mounted (see AB 11 EN).*

---

8. Mount the adapter block (13) to the NAMUR connection block using the screws (13.1).
9. Insert the vent plug (11.1) into the **Exh.** connection.
10. Place the positioner on the adapter block (13) in such a manner that the follower pin (2) rests on the top of the follower clamp (3). Adjust the lever (1) correspondingly.
    Fasten the positioner to the adapter block (13) using the two fixing screws (6.3). Make sure the formed seal (6.2) is properly seated.
11. **For single-acting actuators without air purging** connect the Y1 port of the adapter block to the signal pressure connection of the actuator. Seal the Y2 port with a blanking plug.

For double-acting actuators and actuators with air purging connect the Y2 port of the adapter block to the signal pressure connection of the second actuator chamber or spring chamber of the actuator.

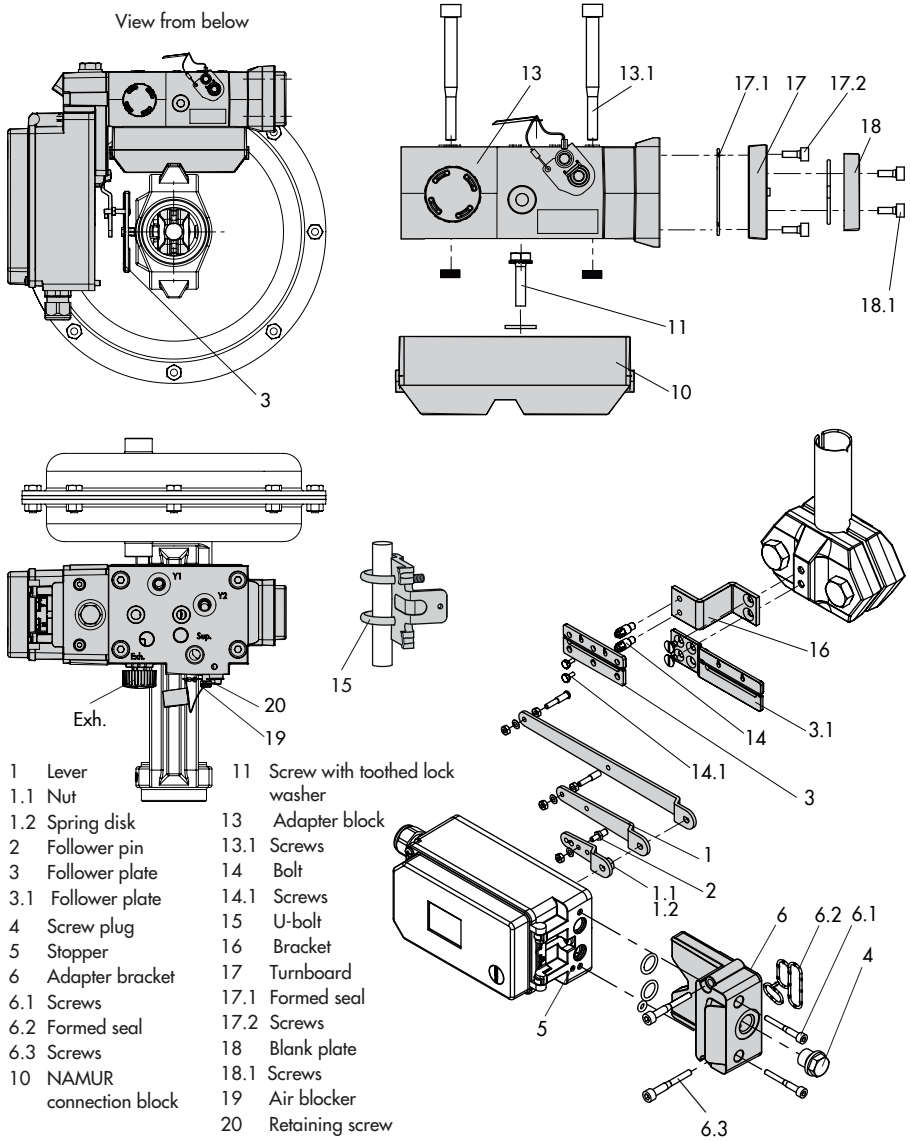

1 Lever
1.1 Nut
1.2 Spring disk
2 Follower pin
3 Follower plate
3.1 Follower plate
4 Screw plug
5 Stopper
6 Adapter bracket
6.1 Screws
6.2 Formed seal
6.3 Screws
10 NAMUR connection block
11 Screw with toothed lock washer
13 Adapter block
13.1 Screws
14 Bolt
14.1 Screws
15 U-bolt
16 Bracket
17 Turnboard
17.1 Formed seal
17.2 Screws
18 Blank plate
18.1 Screws
19 Air blocker
20 Retaining screw

Fig. 9 · Attachment according to VDI/VDE 3847 to the NAMUR rib

4.4 Attachment to Type 3510 Micro-flow Valve

The positioner is attached to the valve yoke using a bracket.

Refer to Table 3 on page 39 for the required mounting parts as well as the accessories with their order numbers.
Note the travel table on page 15:

1. Screw bracket (9.1) to the stem connector (9).
2. Fasten the two pins (9.2) to the bracket (9.1) on the stem connector. Mount the follower plate (3) and fasten it using the screws (9.3).
3. Mount the travel indication scale (accessories) to the outer side of the yoke using the hex screws (12.1), ensuring that the scale is aligned with the stem connector.
4. Fasten the hex bar (11) onto the outer side of yoke by screwing the M8 screws (11.1) directly into the holes on the yoke.
5. Fasten the bracket (10) to the hex bar (11) using the hex screw (10.1), washer and tooth lock washer.
6. Mount connecting plate (6) or pressure gauge bracket (7) with pressure gauges (8) on the positioner, making sure both seal rings (6.1) are seated properly.
7. Unscrew the standard installed lever **M** (1) including follower pin (2) from the positioner shaft.
8. Take lever **S** (1) and screw follower pin (2) in the bore for pin position **17**.
9. Place lever **S** on the positioner shaft and screw tight using the disk spring (1.2) and nut (1.1).
   Move lever once all the way as far as it will go in both directions.
10. Place positioner on the bracket (10) in such a manner that the follower pin slides into the groove of the clamp (3). Adjust the lever (1) correspondingly. Screw the positioner to the bracket (10) using both its screws.

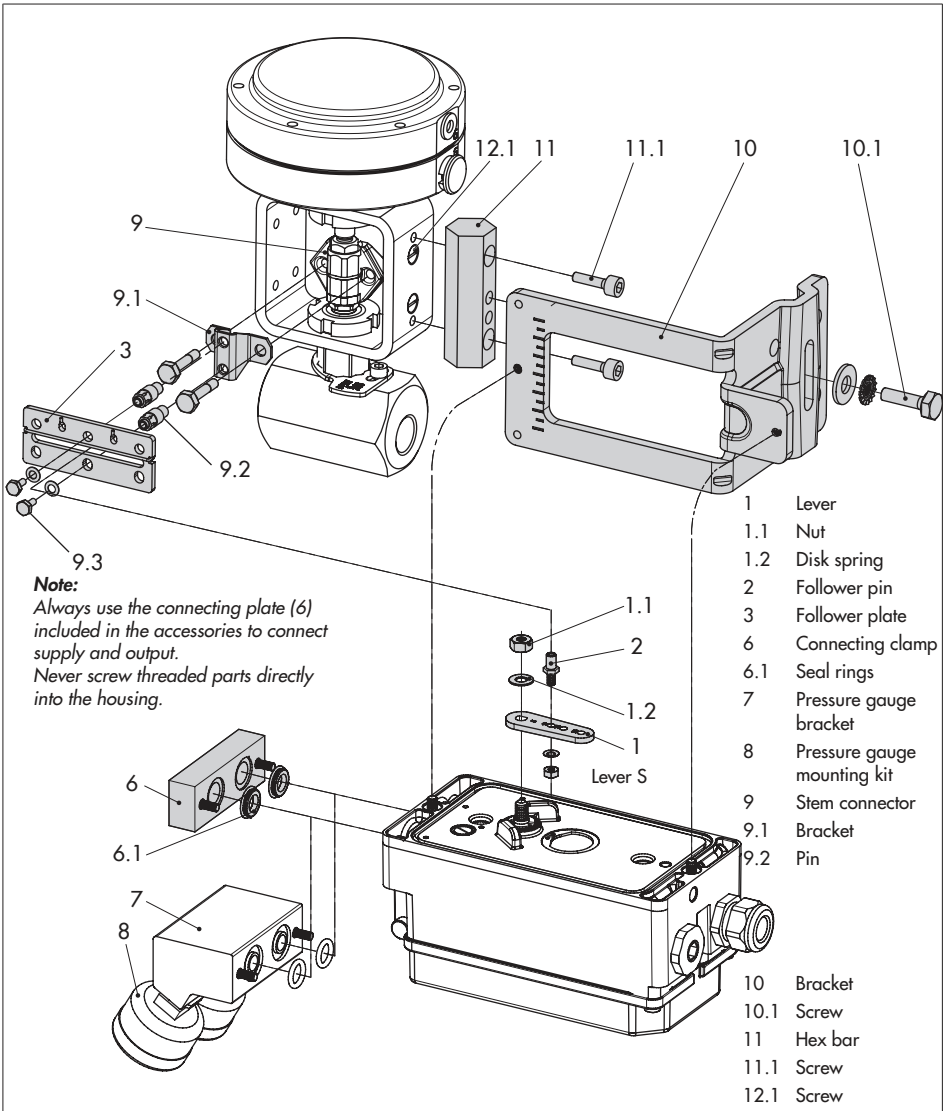

Note:
Always use the connecting plate (6) included in the accessories to connect supply and output.
Never screw threaded parts directly into the housing.

1	Lever
1.1	Nut
1.2	Disk spring
2	Follower pin
3	Follower plate
6	Connecting clamp
6.1	Seal rings
7	Pressure gauge bracket
8	Pressure gauge mounting kit
9	Stem connector
9.1	Bracket
9.2	Pin
10	Bracket
10.1	Screw
11	Hex bar
11.1	Screw
12.1	Screw

Fig. 10 · Attachment to Type 3510 Micro-flow Valve

4.5 Attachment to rotary actuators

The positioner is mounted to the rotary actuator using two pairs of double brackets.

Refer to Table 5 on page 40 for the required mounting parts as well as the accessories with their order numbers.

Prior mounting the positioner to the SAMSON Type 3278 Rotary Actuator, you have to mount the associated adapter (5) to the free end of the rotary actuator shaft.

NOTICE
During the installation of the positioner as described below, it is imperative that the actuator's direction of rotation be observed.

---

1. Place follower clamp (3) on the slotted actuator shaft or the adapter (5).
2. Place coupling wheel (4) with flat side facing the actuator on the follower clamp (3). Refer to Fig. 12 to align slot so that it matches the direction of rotation when the valve is in its closed position.
3. Screw coupling wheel and follower clamp tightly onto the actuator shaft using the screw (4.1) and disk spring (4.2).
4. Screw the bottom pair of brackets (10.1) with the bends pointing either to the inside or to the outside (depending on the actuator size) to the actuator case. Position top pair of brackets (10) and screw tight.
5. Mount connecting plate (6) or pressure gauge bracket (7) with pressure gauges to the positioner, making sure both O-rings are seated properly.
   For **double-acting**, springless rotary actuators, a reversing amplifier is required to attach the positioner to the actuator, see section 4.6.
6. Unscrew the standard follower pin (2) from the positioner's lever **M** (1). Use the metal follower pin (Ø 5) included in the accessories and screw tight into the bore for pin position **90**°.
7. Place positioner on the top pair of brackets (10) and screw tight. Considering the actuator's direction of rotation, adjust lever (1) so that it engages in the slot of the coupling wheel (4) with its follower pin (see Fig. 12). It must be guaranteed that the lever (1) is parallel to the long side of the positioner when the actuator is at half its angle of rotation.
8. Stick scale plate (4.3) on the coupling wheel so that the arrow tip indicates the closed position, and it can be easily read when the valve is installed.

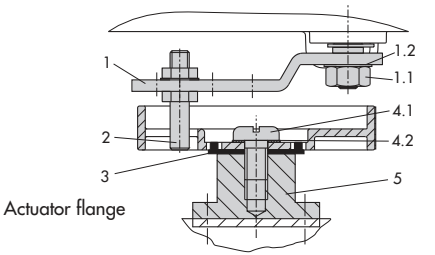

Fig. 11 · Mounting the coupling wheel with Type 3278

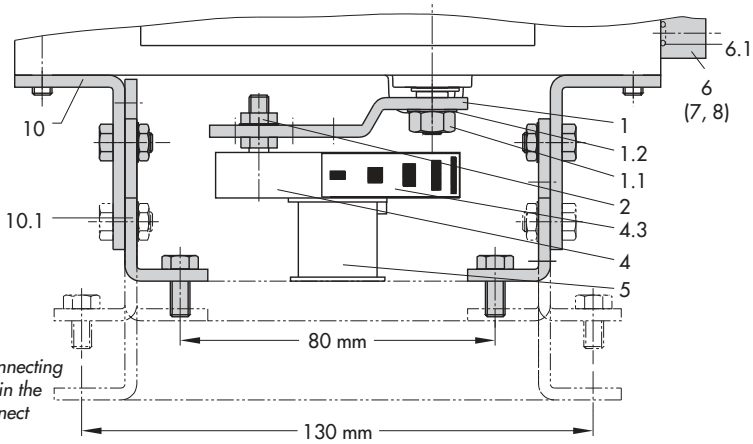

Note:
Always use the connecting plate (6) included in the accessories to connect supply and output.
Never screw threaded parts directly into the housing.

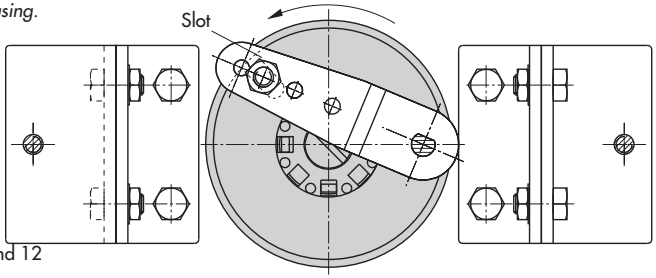

Control valve opens counterclockwise

Control valve opens clockwise

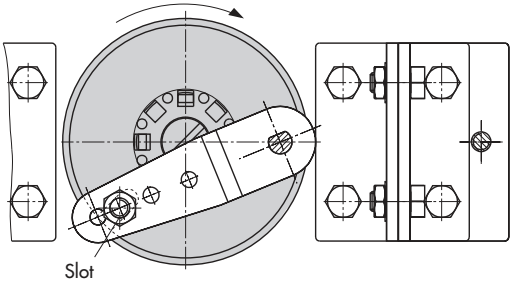

Legends Figs. 11 and 12

1	Lever
1.1	Nut
1.2	Disk spring
2	Follower pin
3	Follower clamp (Fig. 11)
4	Coupling wheel
4.1	Screw
4.2	Disk spring
4.3	Scale plate
5	Actuator shaft Adapter for Type 3278
6.1	Seal rings
7	Pressure gauge bracket
8	Pressure gauge mounting kit
10	Top pair of brackets
10.	Bottom pair of brackets

Fig. 12 · Attachment to rotary actuators

4.5.1 Heavy-duty version

Refer to Table 5 on page 40 for the required mounting parts as well as the accessories with their order numbers.

Both mounting kits contain all the necessary mounting parts. First select correct actuator size. Prepare actuator, and mount required adapter supplied by the actuator manufacturer, if necessary.

1. Mount the housing (10) onto the rotary actuator. In case of VDI/VDE attachment, place spacers (11) underneath, if necessary.
2. **For SAMSON Type 3278 and VETEC S160 Rotary Actuator**, screw the adapter (5) onto the free end of the shaft or place adapter (5.1) onto the shaft of the **VETEC R Actuator.**
   Place adapter (3) onto **Type 3278, VETEC S160 and VETEC R Actuator**. For **VDI/VDE version**, this step depends on the actuator size.
3. Stick adhesive label (4.3) onto the coupling wheel in such a manner that the yellow part of the sticker is visible in the window of the housing when the valve is OPEN. Adhesive labels with explanatory symbols are enclosed and can be stuck on the housing, if required.
4. Screw tight coupling wheel (4) onto the slotted actuator shaft or adapter (3) using screw (4.1) and disk spring (4.2).
5. Undo the standard follower pin (2) on the lever M (1) of the positioner. Attach the follower pin (Ø 5) included in the mounting kit to pin position 90°.
6. If applicable, mount pressure gauge bracket (7) with pressure gauges or, in case G ¼ threaded connections are required, the connecting plate (6), making sure both seal rings (6.1) are seated properly.
   For double-acting, springless rotary actuators, a reversing amplifier is required to attach the positioner to the actuator. Refer to section 4.6.
7. For actuators with a volume of less than 300 cm³, fit the restriction (order no.1400-6964) into the signal pressure output of the positioner (or the output of the pressure gauge bracket or connecting plate).
8. Place positioner on housing (10) and screw it tight. Considering the actuator's direction of rotation, align lever (1) so that it engages in the correct slot of the coupling wheel with its follower pin (Fig. 13).

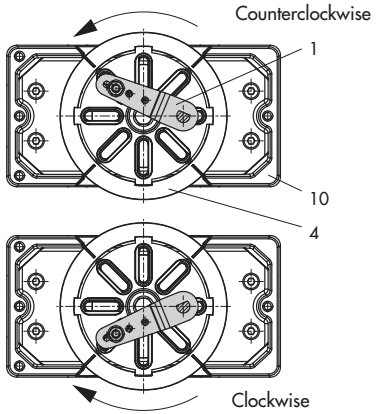

Fig. 13 · Direction of rotation

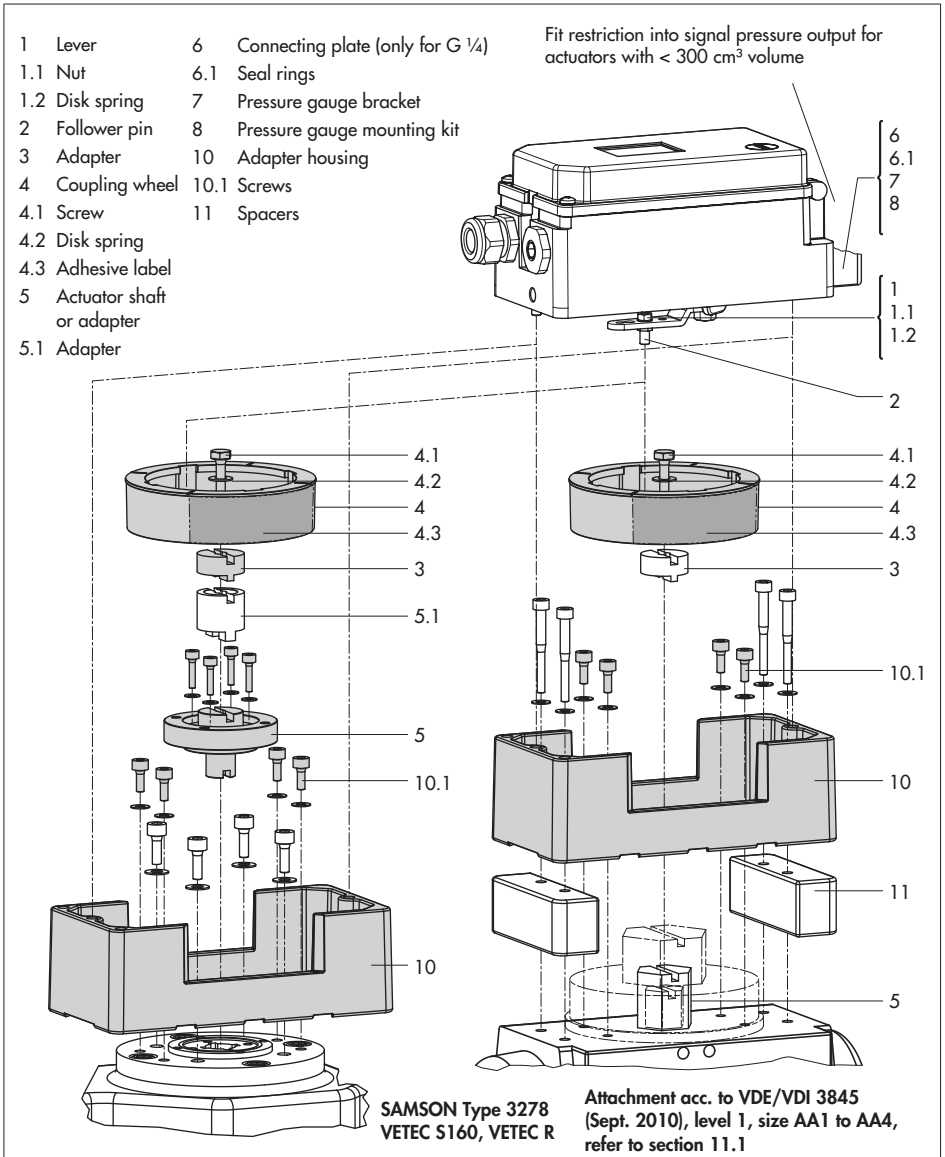

Fig. 14 · Attachment to rotary actuators (heavy-duty version)

4.6 Reversing amplifier for double-acting actuators

For the use with double-acting actuators, the positioner must be fitted with a reversing amplifier, e.g. the SAMSON Type 3710 Reversing Amplifier (see Mounting and Operating Instructions EB 8392 EN).

If a different reversing amplifier (item no. 1079-1118 or 1079-1119) is used, follow the mounting instructions described in section 4.6.1.

The following applies to all reversing amplifiers:

The output signal pressure of the positioner is supplied at the output **A_1** of the reversing amplifier. An opposing pressure, which equals the required supply pressure when added to the pressure at **A_1**, is applied at output **A_2**.
The rule **A_1** + **A_2** = **Z** applies.

A_1: Output **A_1** leading to the signal pressure connection at the actuator which opens the valve when the pressure increases

A_2: Output **A_2** leading to the signal pressure connection at the actuator which closes the valve when the pressure increases

4.6.1 Reversing amplifier (1079-1118 or 1079-1119)

Mounting

1. Mount the connecting plate (6) from the accessories in Table 5 to the positioner. Make sure that both O-rings (6.1) are seated correctly.
2. Thread the special nuts (1.3) from the accessories of the reversing amplifier into the boreholes of the connecting plate.
3. Insert the gasket (1.2) into the recess of the reversing amplifier and push both the special hollow screws (1.1) into the connecting boreholes **A_1** and **Z**.
4. Place the reversing amplifier onto the connecting plate (6) and screw tight using both the special screws (1.1).
5. Use a screwdriver (8 mm wide) to screw the enclosed filters (1.6) into the connecting boreholes **A_1** and **Z**.

NOTICE
The sealing plug (1.5) should not be unscrewed out of the reversing amplifier.
The rubber seal (1.4) is not required and can be removed when the sealing plug is used.

Pressure gauge attachment

The mounting sequence shown in Fig. 15 remains unchanged. Screw a pressure gauge bracket onto the connections **A_1** and **Z**.

Pressure gauge bracket:	G ¼	1400-7106
	¼ NPT	1400-7107

Pressure gauges for supply air Z and output A_1 as listed in Tables 1 to 5.

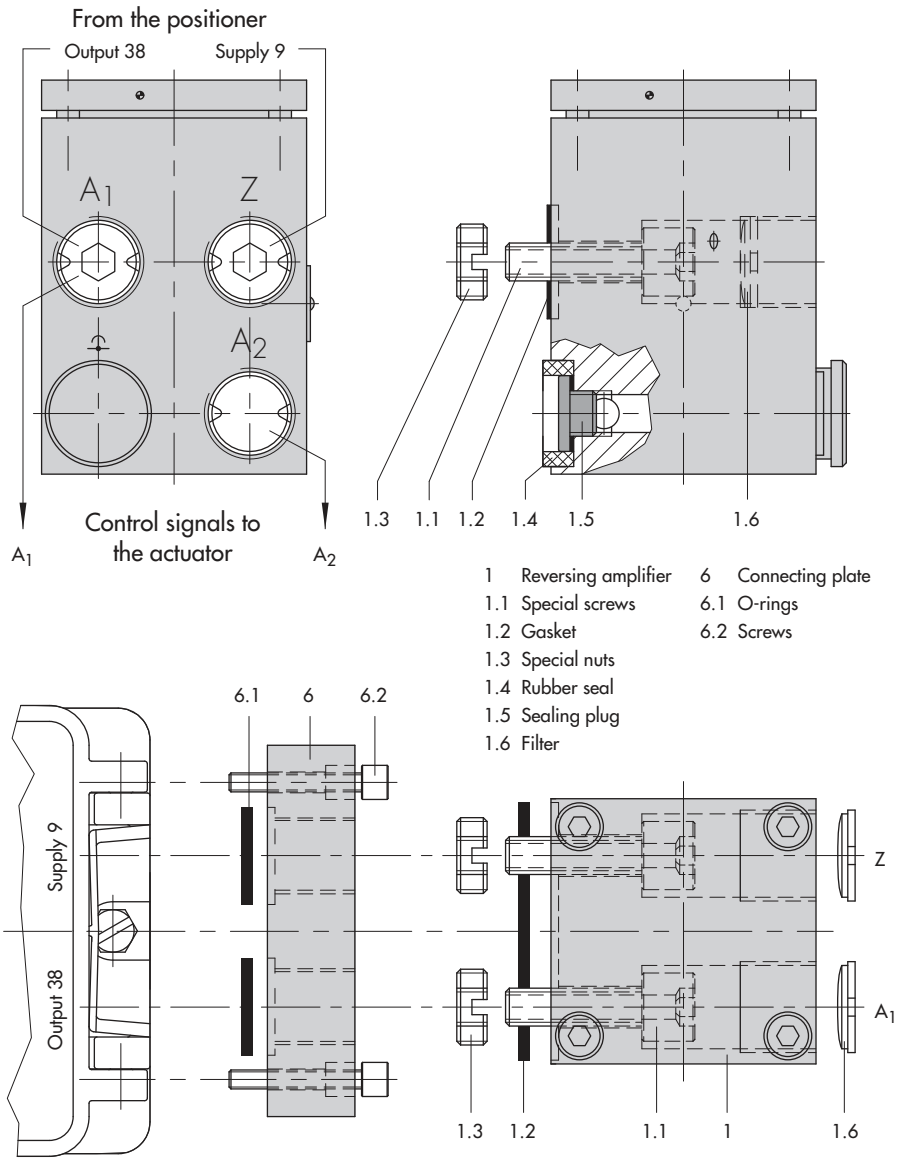

Fig. 15 · Mounting a reversing amplifier (1079-1118 or 1079-1119)

4.7 Attaching positioners with stainless steel housings

Positioners with stainless steel housings require mounting parts that are completely made of stainless steel or free of aluminum.

Note: *The pneumatic connecting plate and pressure gauge bracket are available made of stainless steel (order numbers listed below). The Type 3710 Pneumatic Reversing Amplifier is also available in stainless steel.*

Connecting plate (stainless steel):	G ¼	1400-7476
	¼ NPT	1400-7477
Pressure gauge bracket (st. steel):	G ¼	1400-0265
	¼ NPT	1400-7108

The Tables 1 to 6 (pages 37 to 40) apply for attaching positioners with stainless steel housings with the following restrictions:

Direct attachment

All mounting kits from Tables 1 and 2 can be used. The connection block is not required. The stainless steel version of the pneumatic connecting plate routes the air internally to the actuator.

Attachment according to IEC 60534-6 (NAMUR rib or attachment to rod-type yokes)
All mounting kits from Table 3 can be used. Connecting plate in stainless steel.

Attachment to rotary actuators
All mounting kits from Table 5 can be used except for the heavy-duty version. Connecting plate in stainless steel.

4.8 Air purging function for single-acting actuators

The exhaust air from the positioner is diverted to the actuator spring chamber to provide corrosion protection inside the actuator. The following must be observed:

Direct attachment to Type 3277-5 (stem extends FA/stem retracts FE)
The air purging function is automatically provided.

Direct attachment to Type 3277, 175 to 750 cm²
FA: Remove the stopper 12.2 (Fig. 5 on page 19) at the connection block and make a pneumatic connection to the spring chamber on the vented side.

NOTICE
The method described does not apply to old connection blocks in powder-paint-coated aluminum. In this case, follow the instructions for attachment described below in "Attachment acc. to IEC 60534-6 (NAMUR rib or attachment to rod-type yokes) and to rotary actuators".

FE: The air purging function is automatically provided.

Attachment acc. to IEC 60534-6 (NAMUR rib or attachment to rod-type yokes) and to rotary actuators
The positioner requires an additional port for the exhaust air that can be connected

over piping. An adapter available as an accessory is used for this purpose:

Threaded bushing	G ¼	0310-2619
(M20 x 1.5):	¼ NPT	0310-2550

NOTICE
*The adapter uses one of the M20x1.5 connections in the housing which means **just one** cable gland can be installed.*

Should other valve accessories be used which vent the actuator (e.g. solenoid valve, volume booster, quick exhaust valve), this exhaust air must also be included in the purging function. The connection over the adapter at the positioner must be protected with a check valve, e.g. check valve G ¼ (order no. 8502-0597) mounted in the piping. Otherwise the pressure in the positioner housing would rise above the ambient pressure and damage the positioner when the exhausting components respond suddenly.

4.9 Mounting parts and accessories

Table 1 · Direct attachment to Type 3277-5 Actuator (Fig. 4)			Order no.
Mounting parts	Standard version for actuators up to 120 cm²		1400-7452
	Version compatible with paint for actuators up to 120 cm²		1402-0940
Accessories for the actuator	Switchover plate **old** for Actuator Type 3277-5xxxxxx.**00** (old)		1400-6819
	Switchover plate **new** for Actuator Type 3277-5xxxxxx.**01** (new) [1]		1400-6822
	Connecting plate **new** for Actuator Type 3277-5xxxxxx.**01** (new) [1]: G ⅛ and ⅛ NPT		1400-6823
	Connecting plate **old** for Actuator Type 3277-5xxxxxx.**00** (old): G ⅛		1400-6820
	Connecting plate **old** for Actuator Type 3277-5xxxxxx.**00** (old): ⅛ NPT		1400-6821
Accessories for the positioner	Connecting plate (6)	G ¼	1400-7461
		¼ NPT	1400-7462
	Pressure gauge bracket (7)	G ¼	1400-7458
		¼ NPT	1400-7459
	Pressure gauge mounting kit (8) up to max. 6 bar (output and supply)	Stainless steel/brass	1400-6950
		Stainless steel/st. steel	1400-6951

[1] Only new switchover and connecting plates can be used with new actuators (Index 01). Old and new plates are **not** interchangeable.

Table 2 · Direct attachment to Type 3277 (Fig. 5)					Order no.
Mounting parts	Standard version for actuators with 175, 240, 350, 355, 700, 750 cm²				1400-7453
	Version compatible with paint for actuators with 175, 240, 350, 355, 700, 750 cm²				1402-0941
Accessories	Required piping with screw fitting – for "Actuator stem retracts" – with air purging of the top diaphragm chamber	175 cm²	Steel	G ¼ / G ⅜	1402-0970
				¼ NPT / ⅜ NPT	1402-0976
			Stainl. steel	G ¼ / G ⅜	1402-0971
				¼ NPT / ⅜ NPT	1402-0978
		240 cm²	Steel	G ¼ / G ⅜	1400-6444
				¼ NPT / ⅜ NPT	1402-0911
			Stainl. steel	G ¼ / G ⅜	1400-6445
				¼ NPT / ⅜ NPT	1402-0912
		350 cm²	Steel	G ¼ / G ⅜	1400-6446
				¼ NPT / ⅜ NPT	1402-0913
			Stainl. steel	G ¼ / G ⅜	1400-6447
				¼ NPT / ⅜ NPT	1402-0914
		355 cm²	Steel	G ¼ / G ⅜	1402-0972
				¼ NPT / ⅜ NPT	1402-0979
			Stainl. steel	G ¼ / G ⅜	1402-0973
				¼ NPT / ⅜ NPT	1402-0980
		700 cm²	Steel	G ¼ / G ⅜	1400-6448
				¼ NPT / ⅜ NPT	1402-0915
			Stainl. steel	G ¼ / G ⅜	1400-6449
				¼ NPT / ⅜ NPT	1402-0916
		750 cm²	Steel	G ¼ / G ⅜	1402-0974
				¼ NPT / ⅜ NPT	1402-0981
			Stainl. steel	G ¼ / G ⅜	1402-0975
				¼ NPT / ⅜ NPT	1402-0982
	Connection block with seals and screw		G ¼		1400-8819
			¼ NPT		1400-8820
	Pressure gauge mounting kit (8) up to max. 6 bar (output/supply)		Steel/brass		1400-6950
			St. steel/St. steel		1400-6951

Table 3 · Attachment to NAMUR ribs or control valves with rod-type yokes (20 to 35 mm rod diameter) according to IEC 60534-6 (Figs. 6 and 10)				
Travel in mm	**Lever**	**For actuator**		Order no.
7.5	S	Type 3271-5 Actuator with 60/120 cm² on Type 3510 Valve (Fig. 10)		1400-7457
5 to 50	M [1)]	Actuators from other manufacturers and Type 3271 with 120 to 750 cm²		1400-7454
14 to 100	L	Actuators from other manufacturers and Type 3271, 1400-60 version		1400-7455
40 to 200	XL	Actuators from other manufacturers and Type 3271, versions 1400-120 and 2800 cm² with 120 mm travel		1400-7456
30 or 60	L	Type 3271 Actuator, versions 1400-120 and 2800 cm² with 30 or 60 mm travel		1400-7466
		Mounting brackets for Emerson and Masoneilan linear actuators In addition, a mounting kit acc. to IEC 60534-6 is required depending on the travel. See row above.		1400-6771
Accessories	Connecting plate (6)		G ¼	1400-7461
			¼ NPT	1400-7462
	Pressure gauge bracket (7)		G ¼	1400-7458
			¼ NPT	1400-7459
	Pressure gauge mounting kit (8) up to max. 6 bar (output and supply)		Stainless steel/brass	1400-6950
			St. steel/st. steel	1400-6951

[1)] Lever M is mounted on basic model (included in the scope of delivery of the positioner)

Table 4 · Attachment according to VDI/VDE 3847 (Figs. 7 and 9) **Type 3730-1xx0000000x007000** Electropneumatic Positioner with VDI/VDE 3847 interface		Order no.
Mounting parts	Interface adapter	1402-0257
	Mounting kit for attachment to SAMSON Type 3277with 175 to 750 cm²	1402-0868
	Mounting kit for attachment to SAMSON Type 3271 or non-SAMSON actuators	1402-0869
	Travel pick-off for valve travel up to 100 mm	1402-0177
	Travel pick-off for 100 to 200 mm valve travel (SAMSON Type 3271 only)	1402-0178

Table 5 · Attachment to rotary actuators (Figs. 11 and 12)			Order no.
Mounting parts	Attachment acc. to VDI/VDE 3845 (September 2010), refer to section 11.1 for details		
	Actuator surface corresponds to level 1		
	Size AA1 to AA4, version with CrNiMo steel bracket		1400-7448
	Size AA1 to AA4, heavy-duty version		1400-9244
	Size AA5, heavy-duty version (e.g. Air Torque 10 000)		1400-9542
	Bracket surface corresponds to level 2, heavy-duty version		1400-9526
	Attachment for rotary actuators with max. 180° angle of rotation, level 2		1400-8815 and 1400-9837
	Attachment for SAMSON Type 3278 with 160/320 cm², CrNiMo steel bracket		1400-7614
	Attachment for SAMSON Type 3278 with 160 cm² and for VETEC Type S160, Type R and Type M, heavy-duty version		1400-9245
	Attachment for SAMSON Type 3278 with 320 cm² and for VETEC Type S320, heavy-duty version		1400-5891 and 1400-9526
	Attachment to Camflex II		1400-9120
Accessories	Connecting plate (6)	G ¼	1400-7461
		¼ NPT	1400-7462
	Pressure gauge bracket (7)	G ¼	1400-7458
		¼ NPT	1400-7459
	Pressure gauge mounting kit up to max. 6 bar (output/supply)	St. steel/brass	1400-6950
		St. steel/st. steel	1400-6951

Table 6 · General accessories			Order no.
Accessories	Pneumatic reversing amplifier for double-acting actuators		Type 3710
	Cable gland M20 x 1.5	Black plastic (6 to 12 mm clamping range)	8808-1011
		Blue plastic (6 to 12 mm clamping range)	8808-1012
		Nickel-plated brass (6 to 12 mm clamping range)	8890-4875
		Nickel-plated brass (10 to 14 mm clamping range)	1922-8395
		Stainless steel 1.4305 (8 to 14.5 mm clamping range)	8808-0160
	Adapter M20 x 1.5 to ½ NPT	Aluminum, powder paint coated	0310-2149
		Stainless steel	1400-7114
	Retrofit kit for inductive limit switch 1 x SJ2-SN		1400-9735
	Cover plate with list of parameters and operating instructions	DE/EN (delivery state)	1990-7930
		EN/ES	1990-8212
		EN/FR	1990-8132

5 Connections

WARNING!
Mount the positioner, keeping the following sequence:
1. *Remove protective film from pneumatic connections.*
2. *Mount the positioner on the control valve*
3. ***Connect the supply air***
4. ***Connect the electrical power***
5. *Perform the start-up settings*

The connection of the electrical auxiliary power may cause the actuator stem to move, depending on the operating mode.
Do not touch the actuator stem or obstruct it to avoid risk of injury to hands or fingers.

5.1 Pneumatic connections

NOTICE
The threads in the positioner housing are not designed for direct air connection!

The screw glands must be screwed into the connecting plate, the pressure gauge mounting block or the connection block from the accessories. The air connections are optionally designed as a bore with ¼ NPT or G ¼ thread.
The customary fittings for metal and copper pipes or plastic hoses can be used.

Note: *The supply air must be dry and free from oil and dust. The maintenance instructions for upstream pressure reducing stations must be observed.*

Blow through all air tubes and hoses thoroughly prior to connecting them.

If the positioner is attached directly to the Type 3277 Actuator, the connection of the positioner's output pressure to the actuator is fixed. For attachment according to IEC 60534-6 (NAMUR), the signal pressure can be routed to either the top or bottom diaphragm chamber of the actuator, depending on the actuator's fail-safe action "Actuator stem extends" or "Actuator stem retracts".
For rotary actuators, the manufacturer's specifications for connection apply.

5.1.1 Signal pressure gauges

To monitor the supply air (Supply) and signal pressure (Output), we recommend that pressure gauges be attached (see accessories in Tables 1 to 5).

5.1.2 Supply pressure

The required supply air pressure depends on the bench range and the actuator's operating direction (fail-safe action). The bench range is registered on the nameplate either as spring range or signal pressure range. The direction of action is marked **FA** or **FE**, or by a symbol.

Actuator stem extends FA (Air to open ATO)

Fail-safe position "Valve Closed"
(for globe and angle valves):

Required supply pressure = Upper bench range value + 0.2 bar, minimum 1.4 bar.

Actuator stem retracts FE (Air to close ATC)

Fail-safe position "Valve Open"
(for globe and angle valves):
For tight-closing valves, the maximum signal pressure pst_{max} is roughly estimated as follows:

$$pst_{max} = F + \frac{d^2 \cdot \pi \cdot \Delta p}{4 \cdot A} \text{ [bar]}$$

d = Seat diameter [cm]
Δp = Differential pressure across the valve [bar]
A = Actuator diaphragm area [cm^2]
F = Upper bench range of the actuator [bar]

If there are no specifications, calculate as follows:

Required supply pressure =
Upper bench range value + 1 bar

Note: *The signal pressure at the output (Output 38) of the positioner can be limited to approx. 2.4 bar by setting the parameter* ***P9 = ON****.*

5.2 Electrical connections

DANGER!
Risk of electric shock and/or the formation of an explosive atmosphere!

- *For electrical installation, observe the relevant electrotechnical regulations and the accident prevention regulations that apply in the country of use.*
- *The following regulations apply to mounting and installation in hazardous areas: EN 60079-14: 2008* ***Explosive atmospheres – Part 14: Electrical installations design, selection and erection*** *(or VDE 0165 Part 1).*

NOTICE

- *Adhere to the terminal assignment!*
- *Switching the assignment of the electrical terminals may cause the explosion protection to become ineffective!*
- *Do not loosen enameled screws in or on the housing.*
- *The maximum permissible values specified in the national EC type examination certificates apply when interconnecting intrinsically safe electrical equipment (U_i or U_o; I_i or I_o; P_i or P_o; C_i or C_o, and L_i or L_o).*

Selecting cables and wires:

Observe ***Clause 12 of EN 60079-14: 2008*** *(VDE 0165 Part 1) when installing intrinsically safe circuits. The Subclause 12.2.2.7 applies when running multi-core cables containing more than one intrinsically safe circuit.*

In particular, the radial thickness of the conductor insulation for common insulation materials, such as polyethylene, must have a minimum radial thickness of 0.2 mm.

The diameter of an individual wire in a fine-stranded conductor must not be smaller than 0.1 mm. Protect the conductor ends against splicing, e.g. by using wire-end ferrules.

When two separate cables are used for connection, an additional cable gland can be installed.

Seal cable entries left unused with plugs.

Devices used at ambient temperatures ***below –20 °C*** *must be fitted with metal cable glands.*

Equipment for use in zone 2/zone 22

In equipment operated with type of protection Ex nA II (non-sparking equipment) according to EN 60079-15: 2003, circuits may be connected, interrupted or switched while energized only during installation, maintenance or repair.

Equipment connected to energy-limited circuits with type of protection Ex nL (energy-limited equipment) according to EN 60079-15: 2003 may be switched under normal operating conditions.

The maximum permissible values specified in the Statement of Conformity or its addenda apply when interconnecting the equipment with energy-limited circuits in type of protection Ex nL IIC.

Cable entries

Cable entry with M20x1.5 cable gland, 6 to 12 mm clamping range.
There is a second M20x1.5 threaded bore in the housing that can be used for additional connection, when required.
The screw terminals are designed for wire cross-sections of 0.2 to 2.5 mm². Tighten the screws by at least 0.5 to 0.6 Nm.

The wires for the reference variable must be connected to the terminals 11 and 12 located in the housing. Only use **a current source**!

NOTICE

- *The incorrect connection of a voltage source of just around 7 V (or around 2 V when connected to the wrong pole) by mistake can damage the positioner.*
- *The minimum current for the positioner is 3.7 mA. It should not be unnecessarily interrupted for less than two minutes.*

In general, it is not necessary to connect the positioner to a bonding conductor. Should this be required, however, this conductor can be connected inside the device.

For operation of the limit switches in Type 3730-11/-13/-18 Positioners, switching amplifiers which comply with EN 60947-5-6 must be connected to terminals 41/42 and 51/52 in the output circuit. If the positioner is to be installed in hazardous areas, the relevant regulations must be observed.

Refer to Fig. 16 for the terminal assignment.

NOTICE

The minimum permissible reference variable must not fall below 3.7 mA for the operation of the positioner.

Accessories:

Cable gland M20 x 1.5	Order no.
Black plastic (6 to 12 mm clamping range)	8808-1011
Blue plastic (6 to 12 mm clamping range)	8808-1012
Nickel-plated brass (6 to 12 mm clamping range)	1890-4875
Nickel-plated brass (10 to 14 mm clamping range)	1922-8395
Stainless steel 1.4305 (8 to 14.5 mm clamping range)	8808-0160

Adapter M20 x 1.5 to ½ NPT	
Aluminum, powder paint coated	0310-2149
Stainless steel	1400-7114

5.2.1 Switching amplifier

For operation of the limit switches, switching amplifiers must be connected in the output circuit. To ensure the operating reliability of the positioner, the amplifiers should comply with the limit values of the output circuits conforming to EN 60947-5-6.
If the positioner is to be installed in hazardous areas, the relevant regulations must be observed.

For applications in safe areas (non-hazardous areas), limit switches can be directly interconnected to the binary input of the PLC in accordance with IEC 61131. This applies to the standard operating range for digital inputs according to Clause 5.2.1.2 of IEC 61131-2 with the rated voltage of 24 V DC.

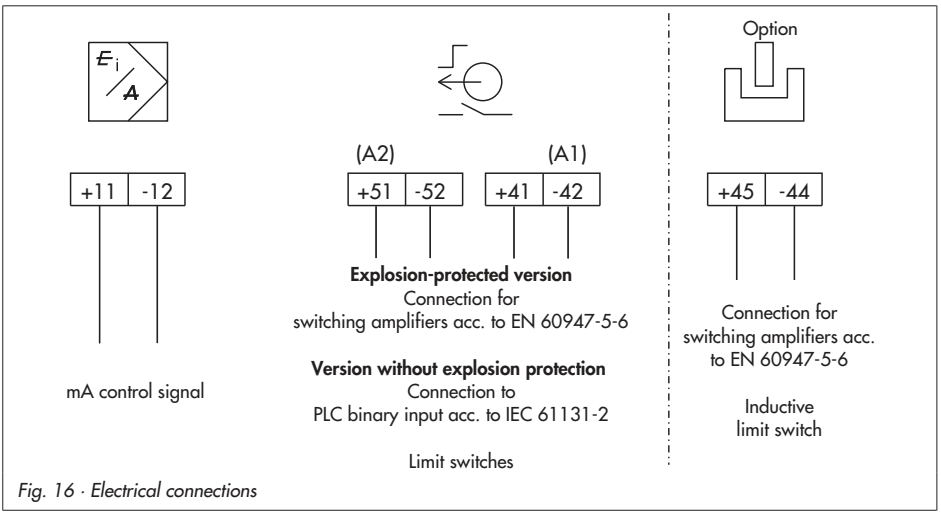

Fig. 16 · Electrical connections

6 Operation

The positioner is mainly operated with the rotary pushbutton.
The volume restriction must be set first to adapt the air delivery.

6.1 Operator controls

Rotary pushbutton

Turn the button to select a parameter code (***P0*** to ***P16***) and then press it to confirm the parameter code selected.
If you want to change a parameter value, turn the button to select the required valve. Then press the button to confirm the value.

NOTICE
*Parameter codes that have been changed are first saved in the EEPROM (protected against power failure) when the display returns to the status indication mode. Turn button to Code **P0** or wait three minutes until the display returns automatically.*
The parameter code is not saved permanently as long as the icon appears at the top of the display.

Note: *The positioner must be re-initialized after the parameter codes **P2, P3, P4** and **P8** have been changed.*

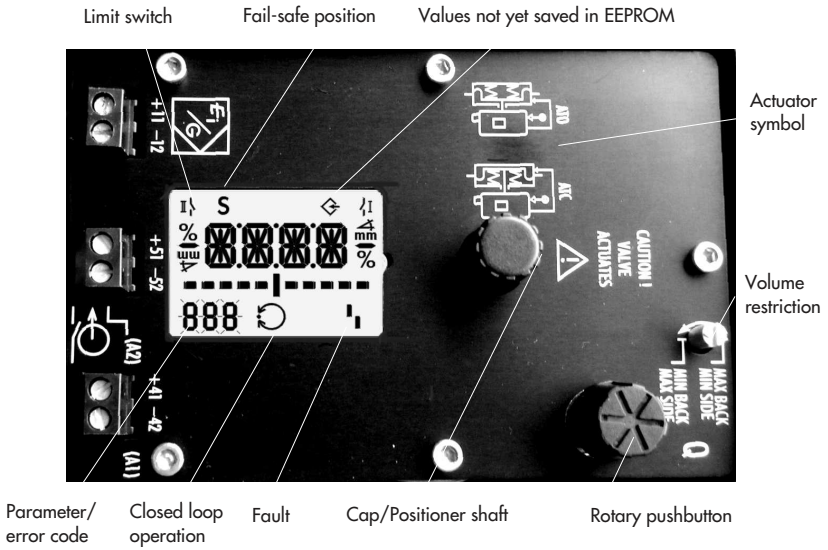

Fig. 17 · Operator controls and display

Volume restriction Q

The volume restriction is used to adapt the air delivery to the actuator size. Two fixed settings are possible depending on how the air is routed at the actuator. See section 7.1 for more details.

Display

The LC display indicates icons that are assigned to codes and functions. The bar graph indicates the system deviation that depends on the sign (+/–) and the value. One bar graph element appears per 1 % system deviation.
If the positioner is not initialized, the lever position in degrees in relation to the longitudinal axis is indicated instead of the system deviation. One bar graph element corresponds to approximately a 5° angle.

If the ⁱ fault icon appears on the display, turn the ⊛ button until ***ERR*** appears to view the error code(s) ***E0*** to ***E15***. Refer to section 7.6 for details.

7 Start-up

WARNING!
Attach the positioner, keeping the following sequence:
1. *Remove protective film from pneumatic connections*
2. *Mount the positioner on the control valve*
3. *Connect the supply air*
4. *Connect the electrical power*
5. ***Perform the start-up settings***

For most applications, the positioner is ready for operation with its default settings, provided it is attached properly.
The positioner just needs to be initialized after the volume restriction has been set and the fail-safe position has been determined.

WARNING!
Do not perform a start-up while the process is running.
On applying supply air and the electric control signal, the control valve may move through its entire travel range/rotational angle range depending on the setting.

Note: *The positioner has a function to monitor the working range.*
*If the lever moves too close to the mechanical stops (risk of mechanical damage), the positioner vents the actuator and the valve moves to its fail-safe position (**S** displayed together with error code **E8** or **E9**).*
*In this case, check the positioner attachment. Reset the displayed error code using **RST** (see section 7.6.)*

7.1 Setting the volume restriction Q

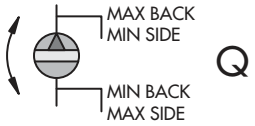

Fig. 18 · Volume restriction Q
MAX BACK/MIN SIDE setting

The volume restriction Q is used to adapt the air delivery to the size of the actuator:

- Actuators with a **transit time < 1 s**, e.g. linear actuators with an effective area smaller than 240 cm², require a restricted air flow rate (MIN).
- Actuators with a **transit time ≥ 1 s** do not require the air flow rate to be restricted (MAX).

The position of volume restriction Q also depends on how the signal pressure is routed at the actuator in **SAMSON actuators**:

- The "SIDE" position applies for actuators with a loading pressure connection at the side, e.g. Type 3271-5.
- The "BACK" position applies for actuators with a loading pressure connection at the back, e.g. in Type 3277-5.

The "SIDE" restriction position always applies for **actuators from other manufacturers**.

Overview · Position of the volume restriction*		
Signal pressure / **Transit time**	< 1 s	≥ 1 s
Connection at the side	MIN SIDE	MAX SIDE
Connection at the back	MIN BACK	MAX BACK

* Intermediate positions are not permitted.

Note: *The positioner needs to be initialized again after the position of the restriction has been changed.*

7.2 Adapting the display

The data representation on the positioner display can be turned by 180°.
If the displayed data appear upside down, proceed as follows:

Turn the ⊛ button until Code ***P1*** appears, press ⊛ button to confirm the selected code. ***P1*** blinks.

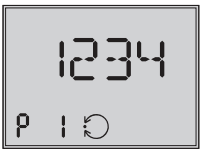

Reading direction for right attachment of pneumatic connections

Turn ⊛ button until the display is adjusted to the desired direction, then confirm reading direction by pressing the ⊛ button.

7.3 Entering the opening direction

- AIR TO OPEN/ATO applies to a valve opening as the signal pressure increases.
- AIR TO CLOSE/ATC applies to a valve closing as the signal pressure increases.

The signal pressure is the air pressure at the output of the positioner, which is applied to the actuator.

AIR TO OPEN/ATO is always used with positioners fitted with a reversing amplifier for double-acting actuators (connections described in section 4.6)

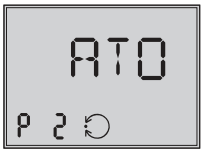

Default *ATO*

Turn ⊛ until Code ***P2*** appears.

Press ⊛ to confirm ***P2***. ***P2*** blinks.

Turn ⊛ until the required fail-safe position appears.

Press ⊛ to confirm the setting.

7.4 Setting other parameters

The following table lists all the parameter codes and their default settings.

If you want to change the default setting of a parameter, proceed in the same manner as previously described.

More details concerning the parameter codes can be found in section 8.

7.5 Initialization

During initialization the positioner adapts itself optimally to the friction conditions and the signal pressure demand of the control valve.
The type and extent of self-adaptation depends on the preset parameters.
MAX is the default setting for the nominal range (Code ***P4***). During the initialization process, the positioner determines the travel/rotational angle of the closing element from the CLOSED position as far as it will go in the other direction.

Parameter codes	Codes marked with * can be changed without having to re-initialize the positioner [...] Default setting		
P0	Display with status indication	***P9 ****	Pressure limit 2.4 bar [OFF]
P1 *	Reading direction	***P10 ****	End position w < [ON]
P2	Fail-safe position [ATO] / ATC	***P11 ****	End position w > [OFF]
P3	Pin position [35]	***P12 ****	Limit value A1 switching threshold [2 %]
P4	Nominal range [MAX]	***P13 ****	Limit value A2 switching threshold [98 %]
P5 *	Characteristic [1]	***P14***	Display of reference variable w
P6 *	Reference variable [4...20 mA]	***P15***	INIT Start initialization
P7 *	w/x direction of action [>>]	***P16 ****	ZERO Start zero calibration
P8	Gain K_P [50]		

Note: *For standard operation, after the positioner is mounted on the valve and the volume restriction has been set and the fail-safe position has been checked over Code **P2**, start initialization over Code **P15** to ensure the optimal functioning of the positioner.*
The positioner works with its standard settings (default settings).

WARNING!
During the initialization, the control valve moves through its entire travel/angle of rotation range. Therefore, do not start initialization while a process is running, but only during start-up, when all shut-off valves are closed.

Start initialization by activating Code ***P15*** as follows:

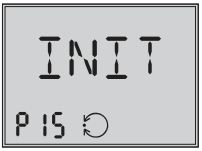

Turn ⊛ until Code ***P15*** appears

Press ⊛ button six seconds long,
6-5-4-3-2-1- is counted down on the display.

Initialization has started, the display blinks!

Note: *The time required for the initialization procedure depends on the actuator transit time and can take a few minutes.*

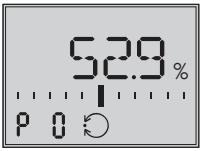

Initialization successfully completed, positioner runs in closed loop operation

After a successful initialization, the positioner runs in closed loop operation indicated by the ↻ closed-loop operation icon and control position in % predetermined by the reference variable on the display.

A malfunctioning leads to the process being interrupted. The ⚠ fault icon appears on the display. See section 7.6 for details.

Canceling initialization

The initialization can be canceled by pressing ⊛. The positioner then moves to the fail-safe position (indicated by ***S*** on display).

First initialization: A new zero calibration can be started directly afterwards.

Initialization following the first initialization: Cancel the fail-safe position and return to original operating mode.

To cancel the fail-safe position, proceed as follows:

When ***P0*** status indication mode of the display is selected:

Press ⊛, ***ESC*** appears.

Turn ⊛, ***RST*** appears.

Press ⊛ to reset the fail-safe position.

The positioner runs again using its original settings.

7.6 Faults

On the occurrence of a fault, the fault icon appears at the bottom of the display.

By turning the button past Code ***P0*** or ***P16***, the respective error code ***E0*** to ***E15*** together with ***ERR*** appear on the display.
Refer to the code list in section 8 for the cause of the errors and the recommended action.

Example:
If, for instance, a travel has been entered over Code ***P4*** (nominal range) which is larger than the maximum valve travel possible, the initialization process would be interrupted (error code ***E2***) because the rated travel would not have been reached (error code ***E6***). The valve moves to the fail-safe position (***S*** indicated on the display).

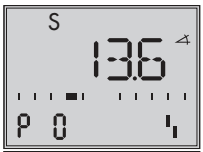

Display of the fault indication

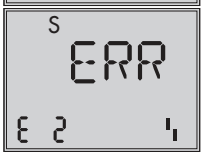

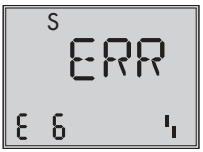

The nominal range (Code ***P4***) must be changed and the positioner re-initialized to remedy this problem.

Reset error codes

The error codes ***E0, E1, E8*** and ***E9*** can be reset as follows:

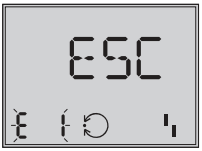

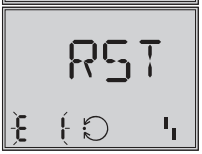

Turn button until the error code appears,

press button, ***ESC*** appears,

turn button, ***RST*** appears,

press button to reset error.

The resetting procedure can be canceled by pressing button when ***ESC*** appears.

7.7 Zero calibration

In case of inconsistencies in the closing position of the valve, e.g. with soft-sealed plugs, it may necessary to recalibrate zero.

Start the zero calibration by activating Code ***P16*** as follows:

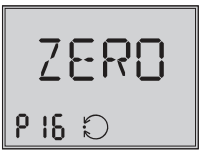

Turn button until Code ***P16*** appears.

Press button six seconds long,
6-5-4-3-2-1 is counted down on the display.

Zero calibration has started, the display blinks!

The positioner moves the control valve to the CLOSED position and recalibrates the internal electric zero point.

When the zero calibration has been successfully completed, the positioner returns to closed loop operation (status indication).

Canceling zero calibration

The zero calibration can be canceled by pressing ⊛. The positioner then moves to the fail-safe position (indicated by ***S*** on the display).

A new zero calibration can be started directly afterwards.

7.8 Reset

The positioner is in closed-loop operation after the initialization has been successfully completed.

A reset causes an initialization to be canceled and all parameters settings are reset to the default settings (refer to section 8).

When ***P0*** status indication mode of the display is selected:

Press down ⊛ for six seconds, the display counts down ***6-5-4-3-2-1*** and ***ESC*** appears on the display.

Turn ⊛, ***RST*** appears on the display.

Press ⊛ to reset parameters to their default settings.

7.9 Manual adjustment

The valve position can be moved as follows using the ***Manual adjustment*** function:

Turn ⊛ until Code ***P14*** appears.

Press down ⊛ for six seconds, the display counts down ***6-5-4-3-2-1***.

– The manual set point (w man) is indicated on the display of an **initialized positioner**.

– The lever position in degrees in relation to the longitudinal axis is indicated on the display of a **positioner that has not been initialized**.

Turn ⊛.

– **Initialized positioner:**
  The manual set point is adjusted in steps of 0.1 %. You can move the valve controlled within its range.

– **Positioner that has not been initialized:**
  By adjusting the manual set point, the valve is only moved in one direction uncontrolled.

Press ⊛ to deactivate the manual adjustment function.

Note: *The* Manual adjustment *function can only be exited as described. The positioner* ***does not automatically*** *exit this function and return the display to the status indication mode after the positioner has not been operated for three minutes.*

---

8 Code list

Code	Display, values [default setting]	Description
Parameter codes Codes marked with * can be changed without having to re-initialize the positioner		
P0		Status indication mode of the display showing basic information. Reset, refer to section 7.8. The reading indicates the valve position or the angle of rotation in % when the positioner is initialized, otherwise the position of the lever in relation to the mid-axis is indicated in degrees (°).
P1 *	**Reading direction**	The reading direction of the display is turned by 180°.
P2	**ATO/ATC**	Parameter to adapt the positioner to how the control valve functions: ATO – Air to open (valve CLOSED in fail-safe position) ATC – Air to close (valve OPEN in fail-safe position)
P3	**Pin position** 17/25/[35]/50/70/100/200 mm/90°	The follower pin must be inserted into the correct pin position according to the valve travel/angle of rotation (select as per travel tables on page 14).
P4	**Nominal range** [MAX] Values with default setting [35]: e.g. 7.5/8.92/10.6/12.6/15.0/17.8/21.2 mm	The possible adjustment range can be selected in stages depending on the selected pin position ***17*** from 3.75 to 10.6 ***25*** from 5.3 to 15.0 ***35*** from 7.5 to 21.2 ***50*** from 10.6 to 30.0 ***70*** from 15.0 to 42.4 ***100*** from 21.2 to 60.0 ***200*** from 42.4 to 120 For ***90°*** Maximum range only, if *P3* = 90° ***MAX*** Maximum possible travel
P5 *	**Characteristic** 1 to 8 [1]	Characteristic selection: Characteristic 1 for globe valves, Characteristic 1 to 8 with rotary actuators (***P3*** = 90°) ***1***: Linear ***2***: Equal percentage ***3***: Rotary plug linear ***4***: Rotary plug eq. percentage ***5***: Butterfly valve linear ***6***: Butterfly valve eq. percentage ***7***: Segmented ball linear ***8***: Segmented ball eq. percentage
P6 *	**Reference variable** [4...20 mA] SRLO/SRHI	For split-range operation ***SRLO*** – low range 4 to 11.9 mA ***SRHI*** – high range 12.1 to 20 mA

P7 *	**w/x** >> /<> [>>]	Direction of action of the reference variable w to the travel/rotational angle x (increasing/increasing or increasing/decreasing).
P8	**Gain K_P** 30/[50]	On initializing the positioner, the gain is set to the selected value.
P9 *	**Pressure limit** ON/[OFF]	The signal pressure can take on the same pressure as the supply air at the maximum [***OFF***] or, in the case that the maximum actuator force can damage the valve, the pressure is limited to approx. 2.4 bar.
P10 *	**End position w <** [ON]/OFF	Tight-closing function: If w reaches up to 1 % towards the final value that causes the valve to close, the actuator is immediately completely vented (with ***ATO*** - Air to open) or filled with air (with ***ATC*** - Air to close). This action always lead to maximum tight-closing of the valve.
P11 *	**End position w >** ON/ [OFF]	Tight-closing function: If w reaches up to 99 % towards the final value that causes the valve to open, the actuator is immediately completely filled with air (with ***ATO*** - Air to open) or vented (with ***ATC*** - Air to close). This action always lead to the valve being completely opened.
P12 *	**Switching point A1** 0 to 100 % [2 %]	Software limit value A1 is displayed or can be changed in relation to the operating range (steps of 0.5 %).
P13 *	**Switching point A2** 0 to 100 % [98 %]	Software limit value A2 is displayed or can be changed in relation to the operating range (steps of 0.5 %).
P14	**Info w/Man w**	Display only, indicates the reference variable applied in 0 to 100 % corresponding 4 to 20 mA. Manual adjustment, refer to section 7.9.
P15	**Start initialization**	The initialization process can be interrupted by pressing the rotary pushbutton. The control valve moves to its fail-safe position. Over parameter code ***P0***, the fail-safe position can be canceled again and the positioner then starts with the original setting. Also after a power supply failure, the positioner starts with its original setting.
P16 *	**Start zero calibration**	The zero calibration process can be interrupted by pressing the rotary pushbutton. The control valve moves to its fail-safe position. Over parameter code ***P0***, the fail-safe position can be canceled again and the positioner then starts with the original setting. Also after a power supply failure, the positioner starts with its original setting.

Error codes		
E0	**Zero error**	Only with tight-closing function ***P10*** w < set to ON The zero point has shifted by more than 5 % compared to initialization. The erro may arise when the mounting position/linkage of the positioner moves or when the valve seat trim is worn, especially with soft-sealed plugs.
	Recommended action	Check valve and mounting of the positioner. If OK, perform a zero calibration over Code ***P16*** (see section 7.7) or select the error code and reset with ***RST***.
E1	**Displayed and INIT values are not identical**	Parameter codes were changed after the initialization had been completed.
	Recommended action	Select the error code and reset with ***RST***.
E2	**Positioner has not been initialized**	
	Recommended action	Set parameter and initialize the positioner over Code ***P15***.
E3	**K_P setting**	Positioner hunts. Volume restriction set incorrectly, too much gain.
	Recommended action	Check the volume restriction setting as described in section 7.1. Limit gain K_P over Code ***P8***. Re-initialize the positioner.
E4	**Transit time is too fast**	The transit times of the actuator determined during initialization are so short (under 0.5 second) that the positioner cannot adapt itself well enough.
	Recommended action	Check the volume restriction setting as described in section 7.1. Re-initialize the positioner.
E5	**Standstill detection is not possible**	Supply pressure is too low or varies. Mounting incorrect.
	Recommended action	Check supply air and positioner mounting. Re-initialize the positioner.
E6	**Travel is not achieved**	Supply pressure is too low, actuator leaks, incorrect travel adjusted or pressure limit function activated.
	Recommended action	Check supply air, positioner mounting and setting. Re-initialize the positioner.

E7	**Actuator does not move**	No supply air, mounting blocked. No input signal or input signal below 3.7 mA
	Recommended action	Check supply air, positioner mounting and mA input signal. Re-initialize the positioner.
E8	**Travel signal at lower limit**	Wrong pin position, wrong lever, wrong attachment direction when NAMUR attachment is used.
	Recommended action	Check positioner mounting and re-initialize the positioner.
E9	**Travel signal at upper limit**	Wrong pin position, wrong lever, wrong attachment direction when NAMUR attachment is used.
	Recommended action	Check positioner mounting and re-initialize the positioner.
E10	Not assigned	
E11	**Hardware**	Defective ceramic oscillator, positioner continues to run with an internal RC oscillator, but it should be replaced as soon as possible.
	Recommended action	Return positioner to SAMSON AG for repair.
E12	**No factory calibration**	No factory calibration performed, memory defective.
	Recommended action	Return positioner to SAMSON AG for repair.
E13	**Memory fault**	Fault in the memory management
	Recommended action	Return positioner to SAMSON AG for repair.
E14	**Checksum error data memory**	Data memory defective
	Recommended action	Return positioner to SAMSON AG for repair.
E15	**Checksum error calibration data**	Data memory defective
	Recommended action	Return positioner to SAMSON AG for repair.

9 Maintenance

The positioner does not require any maintenance.

There are filters with a 100 µm mesh size in the pneumatic connections for supply and output which can be removed and cleaned, if required.

The maintenance instructions of any upstream supply air pressure reducing stations must be observed.

10 Servicing explosion-protected devices

If a part of the device on which the explosion protection is based needs to be serviced, the device must not be put back into operation until a qualified inspector has assessed it according to explosion protection requirements, has issued an inspection certificate or given the device a mark of conformity.

Inspection by a qualified inspector is not required if the manufacturer performs a routine test on the device prior to putting it back into operation. The passing of the routine test must be documented by attaching a mark of conformity to the device. Replace explosion-protected components only by original, routine-tested components from the manufacturer.

Devices that have already been operated outside hazardous areas and are intended for future use inside hazardous areas must comply with the safety requirements placed on serviced devices. Before being used inside hazardous areas, test the devices according to the specifications for servicing explosion-protected devices.

11 Dimensions in mm

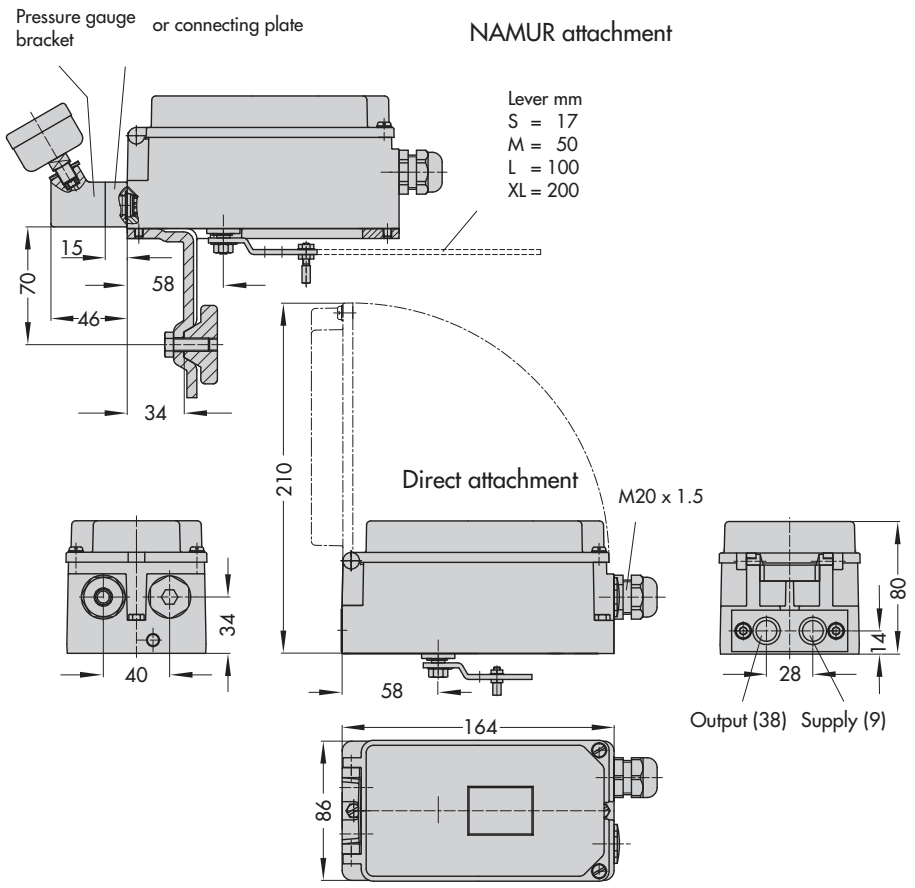

Fig. 19a · NAMUR and direct attachment

Attachment according to VDI/VDE 3847
to Type 3277

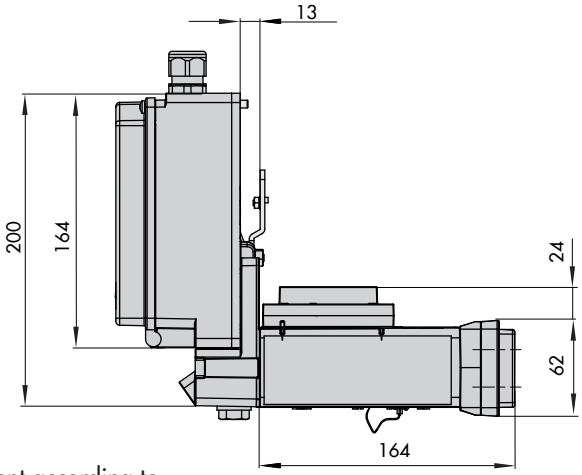

Attachment according to
VDI/VDE 3847
on NAMUR rib

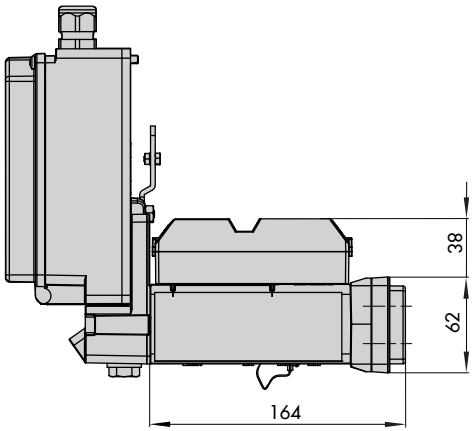

Fig. 19b · Attachment according to VDI/VDE 3847

Heavy-duty version

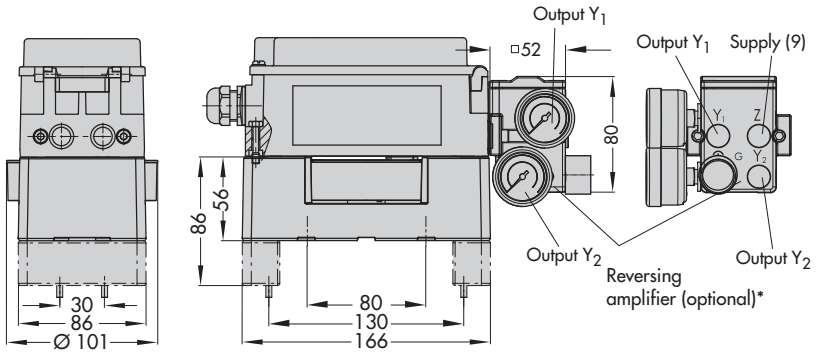

Light version

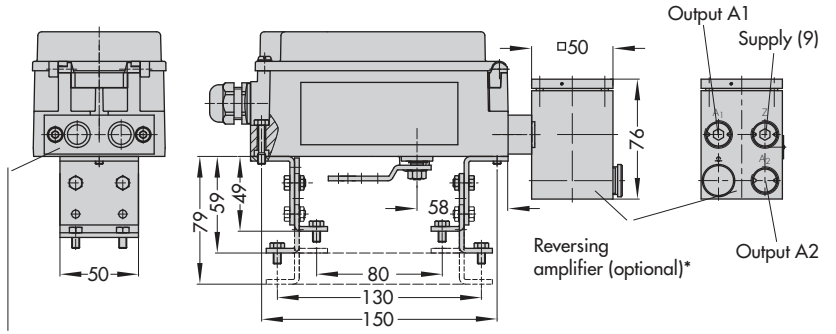

Connecting plate
G ¼ or
¼ NPT

* Reversing amplifier

– Type 3710 (see drawing of heavy-duty version for dimensions)

– 1079-1118/1079-1119, no longer available (see drawing of light version for dimensions)

Fig. 19c · Attachment to rotary actuators VDI/VDE 3845 (Sept. 2010), level 1, size AA1 to AA4

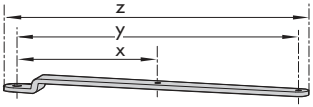

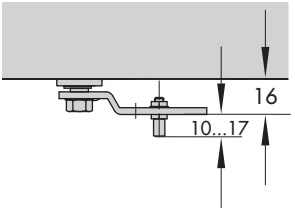

Lever	x	y	z
S	17 mm	25 mm	33 mm
M	25 mm	50 mm	66 mm
L	70 mm	100 mm	116 mm
XL	100 mm	200 mm	216 mm

Fig. 20 · Lever

11.1 Fixing levels according to VDI/VDE 3845 (September 2010)

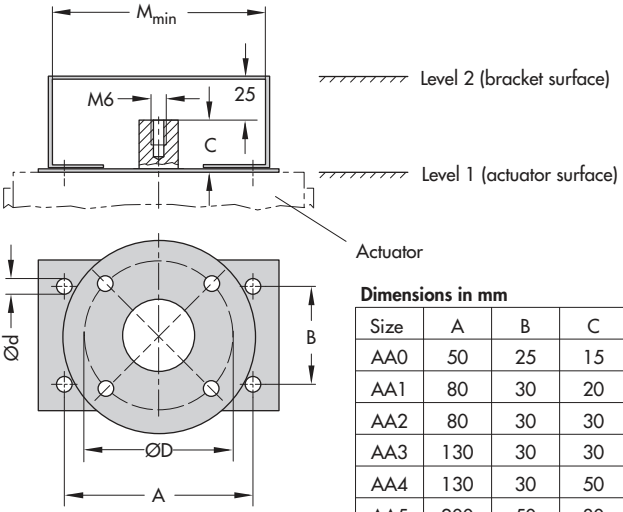

Dimensions in mm

Size	A	B	C	Ød	M_{min}	ØD*
AA0	50	25	15	5.5 for M5	66	50
AA1	80	30	20	5.5 for M5	96	50
AA2	80	30	30	5.5 for M5	96	50
AA3	130	30	30	5.5 for M5	146	50
AA4	130	30	50	5.5 for M5	146	50
AA5	200	50	80	6.5 for M6	220	50

* Flange type F05 according to DIN EN ISO 5211

VDE
VDE Prüf und Zertifizierungsinstitut

TRANSLATION

Offenbach, 2005-11-21

Your ref.	Your letter	Our ref.	Contact
P. Opl	2005-11-08	479000-9010-0001/67325 FG33/bhl-wah	H. Biehl Tel. (069) 8306-249 Fax (069) 8306-716 gerhard.biehl@vde.com

Test report for Information of the Applicant

Testing of the Degree of Protection on enclosures of Type 3730 and Type 3731 Positioners

This test report contains the result of a single investigation carried out on the product submitted. A sample of this product was tested to found the accordance with the thereafter listed standards resp. parts of standards.

The test report does not entitle to use a VDE Certification mark and the *"GS = geprüfte Sicherheit (test safety)"* and does not refer to all VDE specifications applicable to the tested product.

This report may only be passed to a third party in its complete wording including this preamble and the date of issue.

1 Assignment

The samples described in 2 below were tested for compliance with the IP 66 degree of protection.

2 Samples

2.1 Type 3730 Positioner 2.2 Type 3731 Positioner

VDE
VDE Prüf und Zertifizierungsinstitut

3 Basis of assessment

DIN EN 60529/VDE 0470 Part 1/2000-09
Degree of protection provided by enclosures (IP Code)
German version EN 60529:1999+A1:2000

4 Execution of the tests

The dust test had already been carried out on the Type 3730 Positioner under the reference number: 479000-9010-0001/32752 and on the Type 3731 Positioner under the reference number: 479000-9010-0001/58985 with suction as per category 1 at the connecting enclosures of the positioners and solenoid valves. The under pressure was 2 kPa and the test lasted 8 hours.

5 Test results

The testing of the samples described in 2 above yielded the following results:

Protecting against access to hazardous parts and
against ingress of solid foreign objects according to
DIN EN 60529/VDE 0470 Part 1:2000-09 **IP6X satisfied**

Protecting against ingress of water according to
DIN EN 60529/VDE 0470 Part 1:2000-09 **IPX6 satisfied**

The positioner enclosures in the versions submitted meet the requirements of IP 66 degree of protection.

There was no ingress of either dust or water.

VDE- Prüf- und Zertifizierungsinstitut
Fachgebiet FG33

(Signature) (Signature)

Gerhard Biehl

VDE VERBAND DER ELEKTROTECHNIK
ELEKTRONIK INFORMATIONSTECHNIK e.V
Testing and Certification Institute
Merianstrasse 28
D-63069 Offenbach
Prüfbericht VDE n. EN 60529 IP-Schutzart.doc 2 *e-mail: vde-institut@vde.com*

Physikalisch-Technische Bundesanstalt
Braunschweig und Berlin

PTB

TRANSLATION

(1) **EC TYPE EXAMINATION CERTIFICATION**

(2) Equipment and Protective Systems Intended for Use in Potentially Explosive Atmospheres – **Directive 94/9/EC**

(3) EC Type Examination Certificate Number

PTB 04 ATEX 2033

(4) Equipment: Model 3730-11... e/p Positioner

(5) Manufacturer: SAMSON AG Mess-und Regeltechnik

(6) Address: Weismüllerstr. 3, D-60314 Frankfurt, Germany

(7) The equipment and any acceptable variations thereof are specified in the schedule to this certificate.

(8) The Physikalisch-Technische Bundesanstalt, notified body number 0102 in according to Article 9 of the Council Directive 94/9/EC of 23 March 1994, certifies that this equipment has been found to comply with the Essential Health and Safety Requirements relating to the design and construction of equipment and protective systems intended for use in potentially explosive atmospheres as specified in Annex II to the Directive.

The examination and test results are recorded in confidential report **PTB Ex 04-23506**

(9) The Essential Health and Safety Requirements are satisfied by compliance with

EN 50014:1997+A1+A2 EN 50020:2002 EN 50281-1-1:1998

(10) If the sign "X" is placed after the certificate number, it indicates that the equipment is subject to special conditions for safe use specified in the schedule to this certificate.

Physikalisch-Technische Bundesanstalt
Braunschweig und Berlin

PTB

(11) This EC Type Examination Certificate relates only to the design and examination of the specified equipment in compliance with Directive 94/9/EC Further requirements of this Directive apply to the manufacture and supply of this equipment. These requirements are not covered y this Certificate.

(12) The marking of the equipment shall include the following:

II 2G EEx ia IIC T6 and II 2D IP 65 T 80 °C

Zertifizierungsstelle Explosionsschutz Braunschweig, 19 April 2004
By order

(Signature) (Seal)

Dr. Ing. U. Johannsmeyer

EC Type Examination Certificates without signature and seal are invalid.
This EC Type Examination Certificate may only be reproduced in its entirety and without any changes, schedule included.
Extracts or changes shall require the prior approval of the Physikalisch-Technische Bundesanstalt.

Physikalisch-Technische Bundesanstalt., Bundesallee 100, D-38116 Braunschweig

(13) **S c h e d u l e**

(14) **EC TYPE EXAMINATION CERTIFICATE No. PTB 04 ATEX 2033**

(15) **Description of Equipment**

The Model 3730-11... e/p Positioner is a single- or double-acting positioner for attachment to linear or rotary actuators.. It serves for translating control signal into valve stem positions.

The Model 3730-11... e/p Positioner is a passive two-terminal network which may be connected to any certified intrinsically safe circuit, provided the permissible maximum values of Ui, Ii and Pi are not exceeded.

For air supply non-combustible media are used.

The device is intended for use inside and outside of hazardous areas.

The correlation between temperature classification and permissible ambient temperature ranges are shown in the table below:

Temperature class	Permissible ambient temperature range
T6	-40 °C ... 55 °C
T5	-40 °C ... 70 °C
T4	-40 °C ... 80 °C

Electrical data

Signal circuit
(terminals 11/12)

Type of protection. Intrinsic safety EEx ia IIC only for connection to a certified intrinsically safe circuit

Maximum values:

Ui = 28 V
Ii = 115 mA
Pi = 1 W

Ci = 6 nF,
Li = negligible

Physikalisch-Technische Bundesanstalt
Braunschweig und Berlin

PTB

Software limit switches
(terminals 41/42 and 51/52)

Type of protection. Intrinsic safety EEx ia IIC only for connection to a certified intrinsically safe circuit

Maximum values:

Ui = 20 V
Ii = 60 mA
Pi = 250 mW

Ci = 16 nF,
Li = negligible

(16) Test Report: **PTB Ex 04-23506**

(17) Special conditions for safe use

None

(18) Special Health and Safety Requirements

Satisfied by compliance with the standards specified above

Zertifizierungsstelle Explosionsschutz
By order

Braunschweig, 19 April 2004

(Signature) (seal)

Dr. Ing. U. Johannsmeyer
Regierungsdirektor

EC Type Examination Certificates without signature and seal are invalid.
This EC Type Examination Certificate may only be reproduced in its entirety and without any changes, schedule included.
Extracts or changes shall require the prior approval of the Physikalisch-Technische Bundesanstalt.

Physikalisch-Technische Bundesanstalt., Bundesallee 100, D-38116 Braunschweig

Ptb43-3730.doc

Physikalisch-Technische Bundesanstalt
Braunschweig und Berlin

PTB

TRANSLATION

ADDENDUM No.: 1

in compliance with Directive 94/9/EC Annex III Clause 6
to the EC Type Examination Certificate PTB 04 ATEX 2033

Equipment:	Model 3730-11. .e/p Positioner
Marking:	**II 2G EEx ia IIC T6 and II 2D IP 65 T 80°C**
Manufacturer:	SAMSON AG
Address:	Weismüllerstr. 3, D-60314 Frankfurt, Germany

Description of the additions and modifications

The Model 3730-11e/p Positioner was supplemented by an LCD device. The layouts were modified. In future, the equipment may be manufactured in compliance with the test documents specified in the test report.

The electrical data and all the other data specified in the EC Type Examination Certificate apply without change also to this Amendment No. 1

Test report: **PTB Ex 05 24336**

Zertifizierungsstelle Explosionsschutz
By order

Braunschweig, 25 January 2005

(Signature) (Seal)

Dr. Ing. U. Johannsmeyer
Regierungsdirketor

Physikalisch-Technische Bundesanstalt., Bundesallee 100, D-38116 Braunschweig

Ptb43Add-1.doc

Physikalisch-Technische Bundesanstalt
Braunschweig und Berlin

TRANSLATION

ADDENDUM No. 2

According to Directive 94/9/EC Annex III Clause 6
to the EC Type Examination Certificate PTB 04 ATEX 2033

Equipment: Model 3730-11 . . .i/p Positioner

Marking: **II 2 G Ex ia IIC T 6 and II 2 D Ex tD A 21 IP 66 T 80 °C**

Manufacturer: SAMSON AG Mess- und Regeltechnik

Address: Weismüllerstr. 3, D-60314 Frankfurt, Germany

Description of the additions and modifications

The Model 3730-11 .. i/p Positioner has been supplemented by a module to receive an inductive limit contract. The layouts have been modified.

The standard status has been adapted.

The equipment is permitted to be manufactured in the future in compliance with the test documents specified in the test report.

The correlation between temperature classification and the permissible temperature ranges is shown in the table below:

Temperature class	Permissible ambient temperature range
T6	- 40 °C … 55 °C
T5	- 40 °C … 70 °C
T4	- 40 °C … 80 °C

Physikalisch Technische Bundesanstalt - Bundesallee 100 -D - 38116 Braunschweig

Physikalisch-Technische Bundesanstalt
Braunschweig und Berlin

ADDENDUM No. 2 to the EC Type Examination Certificate PTB 04 ATEX 2033

Electrical data

Signal circuit (terminals 11/12)

Type of protection: Intrinsic safety Ex ia IIC only for connection to a certified intrinsically safe circuit

Maximum values:

U_i = 28 V
I_i = 115 mA
P_i = 1 W

C_i = 6 nF
L_i negligible

Software limit contacts: (terminals 41/42) and (51/52)

Type of protection: Intrinsic safety Ex ia IIC only for connection to a certified intrinsically safe circuit

Maximum values:

U_i = 20 V
I_i = 60 mA
P_i = 250 mW

C_i = 16 nF
L_i negligible or

Inductive limit contact: (terminals 41/42)

Type of protection: Intrinsic safety Ex ia IIC only for connection to a certified intrinsically safe circuit

Maximum values:

U_i = 16 V
I_i = 52 mA
P_i = 169 W

U_i = 16 V
I_i = 25 mA
P_i = 64 mW

C_i = 30 nF
L_i = 100 µH

Where the inductive limit contact is connected to analyzing units with output currents of 52 mA or 25 mA respectively, the interrelationship between temperature class, the permissible ambient temperature ranges and the maximum short-circuit currents specified below shall apply.

EC Type examination Certificates without signature and seal are invalid.
This EC Type Examination Certificate may only be reproduced in its entirety and without any change, schedule included. Extracts or changes shall require the prior approval of the Physikalisch-Technische Bundesanstalt.

Physikalisch Technische Bundesanstalt - Bundesallee 100 -D - 38116 Braunschweig

Ptb43 Add-2.doc

ADDENDUM No. 2 to the EC Type Examination Certificate PTB 04 ATEX 2033

Temperature class	Permissible ambient temperature range	Maximum short-circuit current
T6	- 40 °C … 45 °C	52 mA
T5	- 40 °C … 60 °C	
T4	- 40 °C … 75 °C	
T6	- 40 °C … 60 °C	25 mA
T5	- 40 °C … 80 °C	
T4	- 40 °C … 80 °C	

All the other electrical data apply unchanged also to this addendum.

Standards applied:

EN 60079-0:2006 **EN 60079-11:2007** **EN 61241-1:2004**

Test report: **PTB Ex 08-28022**

Zertifizierungsstelle Explosionsschutz
By order

Braunschweig, 26 February 2008

(Signature) (Seal)

Dr.-Ing. U. Johannsmeyer
Director and Professor

Regierungsdirektor

Physikalisch Technische Bundesanstalt - Bundesallee 100 -D - 38116 Braunschweig

ZSEx10101e.doc Stand 2013-02-13

Physikalisch-Technische Bundesanstalt

Braunschweig und Berlin

3. SUPPLEMENT

according to Directive 94/9/EC Annex III.6

to EC-TYPE-EXAMINATION CERTIFICATE PTB 04 ATEX 2033

(Translation)

Equipment: e/p-positioner, type 3730-11..

Marking: Ex **II 2 G Ex ia IIC T6 Gb and II 2 D Ex tb IIIC T80 °C Db IP66**

Manufacturer: SAMSON AG Mess- und Regeltechnik

Address: Weismüllerstr. 3, 60314 Frankfurt, Germany

Description of supplements and modifications

The e/p-positioner, type 3730-11.. is a single- or double-acting positioner intended for installation onto lift drives and pivot drives. It serves for assignment of a valve position to an actuating signal.

The e/p-positioner, type 3730-11.. is a passive two-terminal network that may be connected into all certified intrinsically safe circuits, provided the permissible maximum values for U_i, I_i and P_i are not exceeded.

Non-flammable media are used as pneumatic auxiliary energy.

The equipment is intended for the application inside or outside of hazardous areas.

In the future the e/p-positioner, type 3730-11.. may also be manufactured according to the test documents listed in the test report.

The state of the standards has been updated. Further modifications have not been made.

For relationship between temperature class and the permissible range of the ambient temperature, reference is made to the following table:

Temperature class	Permissible range of the ambient temperature
T6	-40 °C ... 55 °C
T5	-40 °C ... 70 °C
T4	-40 °C ... 80 °C

Physikalisch-Technische Bundesanstalt

Braunschweig und Berlin

3. SUPPLEMENT TO EC-TYPE-EXAMINATION CERTIFICATE PTB 04 ATEX 2033

Electrical data

Signal circuit (terminals 11/12) ..... type of protection Intrinsic Safety Ex ia IIC
only for connection to a certified intrinsically safe circuit

Maximum values:

U_i = 28 V
I_i = 115 mA
P_i = 1 W

C_i = 6 nF
L_i negligibly low

Software-limit contact (terminals 41/42 & 51/52) ..... type of protection Intrinsic Safety Ex ia IIC
only for connection to a certified intrinsically safe circuit

Maximum values:

U_i = 20 V
I_i = 60 mA
P_i = 250 mW

C_i = 16 nF
L_i negligibly low

or

Induktive limit contact (terminals 44/45) ..... type of protection Intrinsic Safety Ex ia IIC
only for connection to a certified intrinsically safe circuit

Maximum values:

U_i = 16 V
I_i = 52 mA
P_i = 169 mA

or

U_i = 16 V
I_i = 25 mA
P_i = 64 mA

C_i = 30 nF
L_i = 100 µH

The following relationship between temperature class, permissible ambient temperature range and maximum short-circuit current applies to the connection of the inductive limit contact to analyzing units with output currents of 52 mA or 25 mA respectively:

EC-type-examination Certificates without signature and official stamp shall not be valid. The certificates may be circulated only without alteration. Extracts or alterations are subject to approval by the Physikalisch-Technische Bundesanstalt.
In case of dispute, the German text shall prevail.

Physikalisch-Technische Bundesanstalt • Bundesallee 100 • 38116 Braunschweig • GERMANY

Physikalisch-Technische Bundesanstalt

Braunschweig und Berlin

3. SUPPLEMENT TO EC-TYPE-EXAMINATION CERTIFICATE PTB 04 ATEX 2033

Temperature class	Permissible range of the ambient temperature	Maximum short-circuit current
T6	-40 °C ... 45 °C	52 mA
T5	-40 °C ... 60 °C	
T4	-40 °C ... 75 °C	
T6	-40 °C ... 60 °C	25 mA
T5	-40 °C ... 80 °C	
T4	-40 °C ... 80 °C	

All other specifications apply without changes also to this supplement.

Applied standards

EN 60079-0:2009 **EN 60079-11:2012** **EN 60079-31:2009**

Test report: PTB Ex 13-23137

Zertifizierungssektor Explosionsschutz
On behalf of PTB:

Dr.-Ing. U. Johannsmeyer
Direktor und Professor

Braunschweig, November 27, 2013

Physikalisch-Technische Bundesanstalt • Bundesallee 100 • 38116 Braunschweig • GERMANY

Physikalisch-Technische Bundesanstalt
Braunschweig und Berlin

PTB

TRANSLATION

(1) **Statement of Conformity**

(2) Equipment and Protective Systems Intended for Use in Potentially Explosive Atmospheres – **Directive 94/9/EC**

(3) EC Type Examination Certificate Number

PTB 04 ATEX 2114 X

(4) Equipment: Model 3730-18 e/p Positioner

(5) Manufacturer: SAMSON AG, Mess- und Regeltechnik

(6) Address: Weismüllerstr. 3, D-60314 Frankfurt, Germany

(7) The equipment and any acceptable variations thereof are specified in the schedule to this certificate and the documents referred to therein.

(8) The Physikalisch-Technische Bundesanstalt, notified body number 0102 in according to Article 9 of the Council Directive 94/9/EC of 23 March 1994, certifies that this equipment has been found to comply with the Essential Health and Safety Requirements relating to the design and construction of equipment and protective systems intended for use in potentially explosive atmospheres as specified in Annex II to the Directive.

The examination and test results are recorded in confidential report PTB Ex 04-24289.

(9) The Essential Health and Safety Requirements are satisfied by compliance with

EN 50021:1999 EN 50281-1-1:1998

(10) If the sign "X" is placed after the certificate number, it indicates that the equipment is subject to special conditions for safe use as specified in the schedule to this certificate.

Physikalisch-Technische Bundesanstalt
Braunschweig und Berlin

PTB

(11) In compliance with the Directive 94/9/EC this Statement of Conformity relates only to the design and construction of the equipment specified. Further requirements of this Directive apply to manufacture and marketing of the equipment.

(12) The marking of the equipment shall include the following:

II 3 G EEx nA II T6 or **II 3 G EEx nL IIC T6**
II 3 D IP 54 T 80 °C or **II 3 D IP 65 T 80 °C**

Zertifizierungsstelle Explosionsschutz Braunschweig, 09 Dezember 2004
By order

(Signature) (Seal)

Dr. Ing. U. Johannsmeyer
Regierungsdirektor

EC Type Examination Certificates without signature and seal are invalid.
This EC Type Examination Certificate may only be reproduced in its entirety and without any changes, schedule included.
Extracts or changes shall require the prior approval of the Physikalisch-Technische Bundesanstalt.

Physikalisch-Technische Bundesanstalt., Bundesallee 100, D-38116 Braunschweig
Ptb43-Ex n.doc

(13) **S c h e d u l e**

(14) **Statement of Conformity PTB 04 ATEX 2114 X**

(15) **Description of Equipment**

The Model 3730-18.. e/p Positioners is a single or double acting positioner serving for adjusting valve steam positions in compliance with an actuating signal.

The device is intended for use within hazardous locations.

The correlation between temperature classification and ambient temperature ranges is shown in the table below:

Temperature class	Permissible ambient temperature range
T6	-40 °C ... 55 °C
T5	-40 °C ... 70 °C
T4	-40 °C ... 80 °C

Electrical data

Signal circuit (terminals 11/12)

Type of protection EEx nA II
or EEx nL IIC

Maximum values:

Ui = 28 V
Ii = 115 mA
Pi = 1 W

Ci = 6 nF
Li = negligible

Ui = 30 V
Ii = 100 mA
Pi = 1 W

Ci = 6 nF
Li = negligible

Physikalisch-Technische Bundesanstalt
Braunschweig und Berlin

PTB

Software limit switches (terminals 41 / 42 and 51 / 52)

Type of protection EEx nA II
or EEx nL IIC

Maximum values
Ui 20 V
Ii = 60 mA
Pi = 250 mW

Ci = 16 nF
Li = negligible

(16) Test Report: **PTB Ex 04 24289**

(17) Special conditions for safe use

If the signal circuit is to be connected to a circuit with type of protection EEx nA II, a series-connected fuse in compliance with IEC 60127-2/II, 250 V F or with IEC 60127-2/VI 250 V T with a maximum fuse nominal current $I_N \leq 80$ mA shall precede the signal circuit. The fuse shall be installed outside of the hazardous location.

If the signal circuit is to be connected to a circuit with type of protection EEx nL IIC, no series fuse need to be provided outside of the hazardous location.

The manufacturer shall ensure and furnish evidence that the enclosure of the Model 3730-18.. e/p Positioner including all cable entries, depending on the type of ventilation used, provides either degree of protection IP 54 or IP 65 in compliance with EN 60529. The cables shall be connected in such a manner that the connection facilities are not subjected to pull and/or twisting.

(18) Special Health and Safety Requirements

Are satisfied by compliance with the standards specified above

Zertifizierungsstelle Explosionsschutz
By order

Braunschweig, 22 November 2004

(Signature) (seal)

Dr. Ing. U. Johannsmeyer
Regierungsdirektor

EC Type Examination Certificates without signature and seal are invalid
This EC Type Examination Certificate may only be reproduced in its entirety and without any changes, schedule included.
Extracts or changes shall require the prior approval of the Physikalisch-Technische Bundesanstalt.

Physikalisch-Technische Bundesanstalt., Bundesallee 100, D-38116 Braunschweig
Ptb43-Ex n.doc

Physikalisch-Technische Bundesanstalt
Braunschweig und Berlin

ADDENDUM No. 1

to the Statement of Conformity PTB 02 ATEX 2114X

Equipment: Model 3730-18 … e/p Positioner

Marking: **II 3G Ex nA II T6 or II 3G Ex nL IIC T6**
II 3D Ex tD A 21 IP 54 T 80 °C or II 3D Ex tD A 21 IP 66 T 80 °C

Manufacturer: SAMSON AG Mess- und Regeltechnik

Address: Weismüllerstrasse 3
60314 Frankfurt am Main, Germany

Description of the additions and modifications

The Model 3730-18 .. has been supplemented with an LCD display. In addition, the equipment has been supplemented with a module to receive an inductive limit contract. The layouts have been modified.

The currently applicable standards have been complied with.

The equipment is permitted to be manufactured in the future in compliance with the test documents specified in the test report.

The correlation between temperature classification and the permissible ambient temperature range is shown in the table below:

Temperature class	Permissible ambient temperature range
T6	- 40 °C … 60 °C
T5	- 40 °C … 70 °C
T4	- 40 °C … 80 °C

The electrical data have been supplemented.

Physikalisch-Technische Bundesanstalt
Braunschweig und Berlin

ADDENDUM No. 1 to the Statement of Conformity PTB 04 ATEX 2114x

Signal circuit……
(terminals 11/12)

Type of protection Ex nA II
or Ex nL IIC

Operational maximum values:

Ui = 28 V
Ii = 115 mA
Pi = 1 W

Ci = 6 nF
Li negligible

or

Ui = 30 V
Ii = 110 mA
Pi = 1 W

Ci = 6 nF
Li negligible

Software limit contacts:
(terminals 41/42 and 51/52)

Type of protection Ex nA II
or Ex nL IIC

Operational maximum values:

Ui = 20 V
Ii = 60 mA
Pi = 250 mW

Ci = 16 nF
Li negligible

or

Inductive limit contacts:
(terminals 41/42)

Type of protection Ex nA II
or Ex nL IIC

Operational maximum values:

Ui = 20 V
Ii = 52 mA
Pi = 169 mW

or

Ui = 20 V
Ii = 25 mA
Pi = 64 mW

Ci = 30 nF
Li = 100 µH

Statements of Conformity without signture and seal are invalid. This Statement of Conformity may be reproduced only without changes. The results laid down in this test report refer exclusively to the test object and the technical documentation submitted. Extracts or changes will require the approval of the Physikalisch-Technische Bundesanstalt.

Physikalisch-Technische Bundesanstalt – Bundesallee 100 - D 38116 Braunschweig
Ptb43Ex n Add-1.doc

Where the inductive limit contact is connected to evaluation instruments with output currents of 52 mA or 25 mA respectively, the correlation between temperature classification and the permissible ambient temperature ranges is specified in the table below.

Temperature class	Permissible ambient temperature range	Maximum short-circuit current
T6	- 40 °C … 45 °C	52 mA
T5	- 40 °C … 60 °C	
T4	- 40 °C … 75 °C	
T6	- 40 °C … 60 °C	25 mA
T5	- 40 °C … 80 °C	
T4	- 40 °C … 80 °C	

The special conditions and all the other data of the Statement of Conformity apply unchanged also to this Addendum No. 1.

Applicable standards:

EN 60079-0:2006 **EN 60079-15:2005** **EN 61241-1:2004**

Test report: PTB Ex 08-27242

Zertifizierungsstelle Explosionsschutz Braunschweig, 26 February 2008

By order

(Signature) (Seal)
Dr.-Ing. U. Johannsmeyer
Director and Professor

Physikalisch-Technische Bundesanstalt

Braunschweig und Berlin

2. SUPPLEMENT

to CONFORMITY STATEMENT PTB 04 ATEX 2114 X

(Translation)

Equipment: e/p-positioner, type 3730-18..

Marking: Ex **II 3 G Ex nA II T6 or II 3 G Ex nL IIC T6 or**
II 3 D Ex tD A21 IP54 T 80 °C or II 3 D Ex tD A21 IP66 T 80 °C

Manufacturer: SAMSON AG Mess- und Regeltechnik

Address: Weismüllerstr. 3, 60314 Frankfurt am Main, Germany

Description of supplements and modifications

The e/p-positioner, type 3730-18.. is a single- or double-acting positioner. It serves for assignment of a valve position to an actuating signal.

Non-flammable media are used as pneumatic auxiliary energy.

The equipment is intended for the application inside of hazardous areas.

In the future the e/p-positioner, type 3730-18.. may also be manufactured according to the test documents listed in the test report.

The state of the standards has been updated. Further modifications have not been made.

For relationship between temperature class and the permissible range of the ambient temperature, reference is made to the following table:

Temperature class	Permissible range of the ambient temperature
T6	-40 °C ... 55 °C
T5	-40 °C ... 70 °C
T4	-40 °C ... 80 °C

ZSEx10201e.doc

Physikalisch-Technische Bundesanstalt

Braunschweig und Berlin

2. SUPPLEMENT TO CONFORMITY STATEMENT PTB 04 ATEX 2114 X

Electrical data

Signal circuit ..... type of protection Ex ic IIC
(terminals 11/12) or Ex nA II

Operational maximum values:

U_i = 28 V
I_i = 115 mA
P_i = 1 W

C_i = 6 nF
L_i negligibly low

or

U_i = 30 V
I_i = 100 mA
P_i = 1 W

C_i = 6 nF
L_i negligibly low

Software-limit contact ..... type of protection Ex ic IIC
(terminals 41/42 and 51/52) or Ex nA II

Operational maximum values:

U_i = 20 V
I_i = 60 mA
P_i = 250 mW

C_i = 16 nF
L_i negligibly low

or

Induktive limit contact ..... type of protection Ex ic IIC
(terminals 44/45) or Ex nA II

Operational maximum values:

U_i = 20 V
I_i = 52 mA
P_i = 169 mW

or

U_i = 20 V
I_i = 25 mA
P_i = 64 mW

C_i = 30 nF
L_i = 100 µH

The following relationship between temperature class, permissible ambient temperature range and maximum short-circuit current applies to the connection of the inductive limit contact to analyzing units with output currents of 52 mA or 25 mA respectively:

Conformity Statements without signature and official stamp shall not be valid. The certificates may be circulated only without alteration. Extracts or alterations are subject to approval by the Physikalisch-Technische Bundesanstalt. In case of dispute, the German text shall prevail.

Physikalisch-Technische Bundesanstalt • Bundesallee 100 • 38116 Braunschweig • GERMANY

2. SUPPLEMENT TO CONFORMITY STATEMENT PTB 04 ATEX 2114 X

Temperature class	Permissible range of the ambient temperature	Maximum short-circuit current
T6	-40 °C ... 45 °C	52 mA
T5	-40 °C ... 60 °C	
T4	-40 °C ... 75 °C	
T6	-40 °C ... 60 °C	25 mA
T5	-40 °C ... 80 °C	
T4	-40 °C ... 80 °C	

Special conditions

Type of protection Ex ic IIC

A fuse shall be connected in series when the signal circuit is connected to a circuit of type of protection Ex ic IIC.
The equipment may be switched under service conditions.

Type of protection Ex nA II

When the signal circuit is connected to a circuit of type of protection Ex nA II a fuse according to IEC 60127-2/VI, 250 V T with a nominal maximum fuse current of $I_N \leq 40$ mA shall be connected in series. This fuse shall be arranged outside of the hazardous area.
Connecting, disconnecting as well as switching of energized circuits is only permitted during installation, maintenance or repair work.

Protection by enclosure

The manufacturer shall guarantee and document that the enclosure of the equipment including all cable glands complies with a degree of protection of either IP54 or IP65 according to IEC 60529, depending on the type of application.

All other specifications apply without changes also to this supplement.

Physikalisch-Technische Bundesanstalt
Braunschweig und Berlin
2. SUPPLEMENT TO CONFORMITY STATEMENT PTB 04 ATEX 2114 X

The future marking reads:

Ⓔx **II 3 G Ex ic IIC T6 Gc or II 3 G Ex nA II T6 Gc and**
II 3 D Ex tc IIIC T80 °C Dc IP66

Applied standards

EN 60079-0:2009 EN 60079-11:2012 EN 60079-15:2010 EN 60079-31:2009

Test report: PTB Ex 13-23164

Zertifizierungssektor Explosionsschutz
By order:

Dr.-Ing. U. Johannsmeyer
Direktor und Professor

Braunschweig, November 27, 2013

Conformity Statements without signature and official stamp shall not be valid. The certificates may be circulated only without alteration. Extracts or alterations are subject to approval by the Physikalisch-Technische Bundesanstalt.
In case of dispute, the German text shall prevail.
Physikalisch-Technische Bundesanstalt • Bundesallee 100 • 38116 Braunschweig • GERMANY

Installation Manual for apparatus certified by CSA for use in hazardous locations.

Electrical rating of intrinsically safe apparatus and apparatus for installation in hazardous locations.

Table 1: Maximum values

	Control signal	Limit switches software	Inductive limit switch type SJ2-SN.
Circuit No.	1	2 and 3	4
Terminal No.	11 / 12	41 / 42 and 51 / 52	44 / 45
U_i or V_{max}	28V	20V	16V
I_i or I_{max}	115mA	60mA	25 / 52mA
P_i or P_{max}	1W	250mW	64 / 169mW
C_i	6nF	16nF	30nF
L_i	0µH	0µH	100µH

Notes: Entity parameters shall meet the following requirements:

$U_0 \leq U_i$ or V_{max} / $I_0 \leq I_i$ or I_{max} / P_0 or $P_{max} \leq P_i$ or P_{max}
$C_a \geq C_i + C_{cable}$ and $L_a \geq L_i + L_{cable}$

Table 2: CSA – certified barrier parameters of circuit 1

Barrier	Supply barrier		Evaluation barrier	
	V_{oc}	R_{min}	V_{oc}	R_{min}
circuit 1	≤28V	≥300Ω	≤28V	Diode

Table 3: The correlation between temperature classification and permissible ambient temperature ranges is shown in the table below:

Temperature class	Permissible ambient temperature range
T6	- 40℃ ... 55℃
T5	- 40℃ ... 70℃
T4	- 40℃ ... 80℃

Table 4: The correlation between temperature classification and permissible ambient temperature ranges and short-circuit current for the inductive limit switch:

Temperature class	Permissible ambient temperature range for type SJ2-SN. limit switch	
	@ I_{sc} (I_0) = 25 mA	@ I_{sc} (I_0) = 52 mA
T6	- 40℃ ... 65℃	- 40℃ ... 45℃
T5	- 40℃ ... 80℃	- 40℃ ... 60℃
T4	- 40℃ ... 80℃	- 40℃ ... 75℃

Intrinsically safe if installed as specified in manufacturer's installation manual.
CSA- certified for hazardous locations

Ex ia IIC T6; Class I, Zone 0
Class I; Groups A, B, C, D
Class II; Groups E, F + G; Class III. **Type 4 Enclosure / IP 66**

Notes:

1.) The apparatus may be installed in intrinsically safe circuits only when used in conjunction with CSA certified apparatus. For maximum values of V_{max}; I_{max}; P_{max} ; C_i and L_i of the various apparatus see Table 1 on page 1.

2.) For barrier selection see Table 2 on page 1.

3.) The installation must be in accordance with the C.E.C. Part 1.

4.) Use only supply wires suitable for 5°C above surrounding temperature.

5.) For CSA Certification, Safety Barrier must be CSA Certified and installed in accordance with C.E.C. Part. 1. Each pair of I.S. wires must be protected by a shield that is grounded at the I.S. Ground. The shield must extend as close to the terminals as possible.

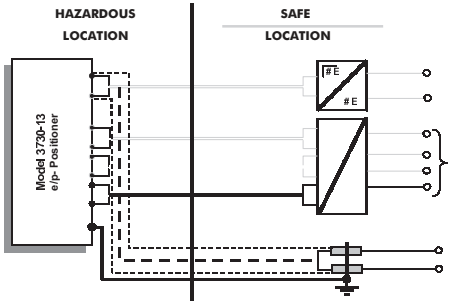

CSA- certified for hazardous locations

Ex nA II T6; Class I, Zone 2
Class II, Div. 2 Groups A, B, C, D
Class II, Div. 2 Groups E, F+G; Class III. **Type 4 Enclosure / IP 66**

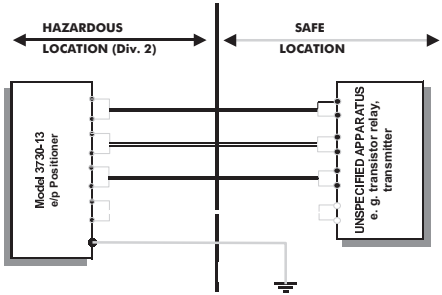

Notes:

1.) The installation must be in accordance with the Canadian Electrical Code, Part 1

2.) For the maximum values for the individual circuits see Table 1 and 2.

3.) The cables shall be protected by conduits.

4.) Cable entry only rigid metal conduit according to drawing No. 1050-0539 T and 1050-0540 T

Installation Manual for apparatus approved by FM for use in hazardous locations.

Electrical rating of intrinsically safe apparatus and apparatus for installation in hazardous locations.

Table 1: Maximum Entity and Non Incendive Field Wiring values

	Control signal	Limit switches software	Inductive limit switch type SJ2-SN.
Circuit No.	1	2 and 3	4
Terminal No.	11 / 12	41 / 42 and 51 / 52	44 / 45
U_i or V_{max}	28V	20V	16V
I_i or I_{max}	115mA	60mA	25 / 52mA
P_i or P_{max}	1W	250mW	64 / 169mW
C_i	6nF	16nF	30nF
L_i	0µH	0µH	100µH

Notes: Entity parameters shall meet the following requirements:

$U_0 \leq U_i$ or V_{max} / $I_0 \leq I_i$ or I_{max} / P_0 or $P_{max} \leq P_i$ or P_{max}
$C_a \geq C_i + C_{cable}$ and $L_a \geq L_i + L_{cable}$

Table 2: FM – approved barrier parameters of circuit 1

Barrier	Supply barrier				Evaluation barrier		
	V_{oc}	R_{min}	I_{sc}	P_{max}	V_{oc}	R_{min}	I_{sc}
circuit 1	≤28V	≥280Ω	≤115mA	≤1W	≤28V	#	0mA

Table 3: The correlation between temperature classification and permissible ambient temperature ranges is shown in the table below:

Temperature class	Permissible ambient temperature range
T6	- 40℃ ... 55℃
T5	- 40℃ ... 70℃
T4	- 40℃ ... 80℃

Table 4: The correlation between temperature classification and permissible ambient temperature ranges and short-circuit current for the inductive limit switch:

Temperature class	Permissible ambient temperature range for type SJ2-SN. limit switch	
	@ I_{sc} (I_0) = 25 mA	@ I_{sc} (I_0) = 52 mA
T6	- 40℃ ... 65℃	- 40℃ ... 45℃
T5	- 40℃ ... 80℃	- 40℃ ... 60℃
T4	- 40℃ ... 80℃	- 40℃ ... 75℃

FM- approved for hazardous locations

Class I, Zone 0 AEx ia IIC T6
Class I, II, III, Div. 1, Groups A, B, C, D, E, F + G **NEMA 4X / IP66**

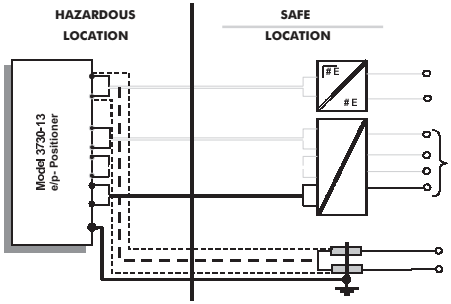

Notes:

1.) The apparatus may be installed in intrinsically safe circuits only in conjunction with FM-approved associated intrinsically safe apparatus with entity parameters. For the maximum input values see Table 1.

2.) For the interconnection of intrinsically safe apparatus and associated intrinsically safe apparatus not specifically examined in combination as a system, the entity parameters must meet the following requirements:

V_{OC} or U_0 ≤ U_i or V_{max}
I_{SC} or I_0 ≤ I_i or I_{max}
P_0 ≤ P_i or P_{max}
C_a or C_0 ≥ $C_i + C_{Cable}$,
L_a or L_0 ≥ $L_i + L_{Cable}$

3.) For barrier selection see Table 2.

4.) The installation must be in accordance with the National Electrical Code ANSI/NFPA 70 and ANSI/ISA RP 12.06.01.

5.) Use only supply wires suitable for 5°C above surrounding temperature.

6.) For the permissible maximum values for the intrinsically safe circuits 1 - 4 see Table 1.

7.) For the permissible barrier parameters for circuit 1 see Table 2.

8.) Cable entry M 20 x 1.5 or metal conduit according to drawing No. 1050 – 0539 T or 1050 – 0540 T.

FM- approved for hazardous locations

Class I, Zone 2 AEx nA II
Class I, Division 2, Groups A, B, C, D
Class II, Division 2 Groups F + G **NEMA 4X / IP66**

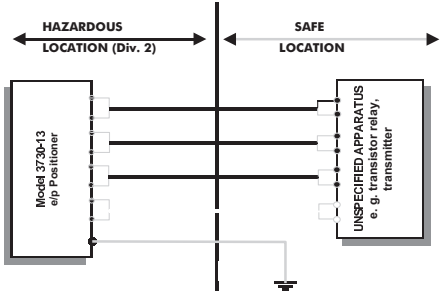

Notes:

1.) The installation must be in accordance with the National Electrical Code ANSI/NFPA 70.

2.) For the maximum values for the individual circuits see Table 1.
Cable entry only rigid metal conduit.

Nonincendive Field Wiring:

1.) The apparatus may be installed in nonincendive field wiring circuits only in conjunction with FM-approved associated nonincendive field wiring apparatus or FM-approved associated intrinsically safe apparatus with entity parameters. For the maximum input values of the nonincendive field wiring apparatus see Table 1.

2.) For the interconnection of nonincendive field wiring apparatus and associated nonincendive field wiring apparatus not specifically examined in combination as a system, the nonincendive field wiring parameters must meet the following requirements:

V_{OC} or U_0 ≤ U_i or V_{max}
I_{SC} or I_0 ≤ I_i or I_{max}
P_0 ≤ P_i or P_{max}
C_a or C_0 ≥ $C_i + C_{Cable}$
L_a or L_0 ≥ $L_i + L_{Cable}$

3.) Installation must be in accordance with the National Electrical Code ANSI/NFPA 70 and ANSI/ISA 12.12.01.

SAMSON AG · MESS- UND REGELTECHNIK
Weismüllerstraße 3 · 60314 Frankfurt am Main, Germany
Phone: +49 69 4009-0 · Fax: +49 69 4009-1507
Internet: http://www.samson.de

EB 8384-1 EN

S/Z 2015-08